Short-Circuit
ANSI Standard

Short-Circuit Analysis

Types of SC Faults

- Three-Phase Ungrounded Fau
- Three-Phase Grounded Fault
- Phase to Phase Ungrounded F
- Phase to Phase Grounded Fault
- Phase to Ground Fault

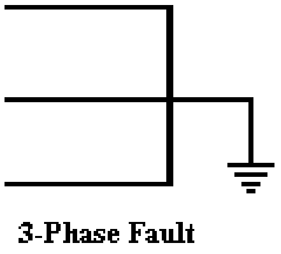
3-Phase Fault

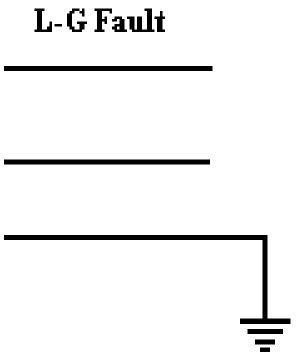
L-G Fault

Fault Current

- $I_{L\text{-}G}$ can range in utility systems from a few percent to possibly 115 % (if $X_o < X_1$) of $I_{3\text{-phase}}$ (85% of all faults).
- In industrial systems the situation $I_{L\text{-}G} > I_{3\text{-phase}}$ is rare. Typically $I_{L\text{-}G} \cong .87 * I_{3\text{-phase}}$
- In an industrial system, the three-phase fault condition is frequently the only one considered, since this type of fault generally results in Maximum current.

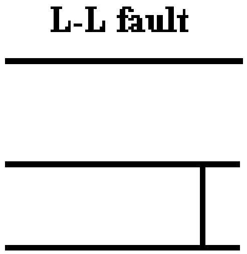
L-L fault

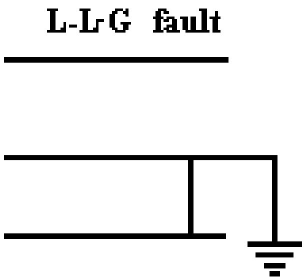
L-L-G fault

Purpose of Short-Circuit Studies

- A Short-Circuit Study can be used to determine any or all of the following:
  - Verify protective device close and latch capability
  - Verify protective device Interrupting capability
  - Protect equipment from large mechanical forces (maximum fault kA)
  - I^2t protection for equipment (thermal stress)
  - Selecting ratings or settings for relay coordination

System Components Involved in SC Calculations

- Power Company Supply
- In-Plant Generators
- Transformers (using negative tolerance)
- Reactors (using negative tolerance)
- Feeder Cables and Bus Duct Systems (at lower temperature limits)

System Components Involved in SC Calculations

- Overhead Lines (at lower temperature limit)
- Synchronous Motors
- Induction Motors
- Protective Devices
- Y_0 from Static Load and Line Cable

Elements That Contribute Current to a Short-Circuit

- Generator
- Power Grid
- Synchronous Motors
- Induction Machines
- Lumped Loads
  (with some % motor load)
- Inverters
- I_0 from Yg-Delta Connected Transformer

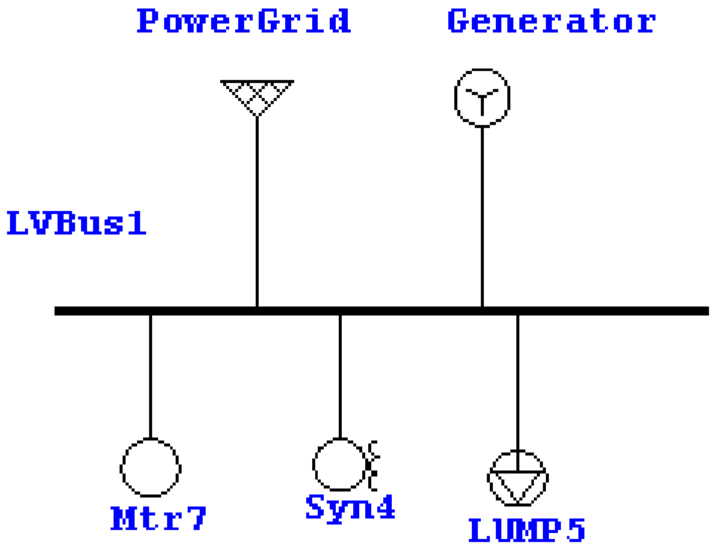
PowerGrid
Generator
LVBus1
Mtr7
Syn4
LUMP5

Elements Do Not Contribute Current in PowerStation

- Static Loads
- Motor Operated Valves
- All Shunt Y Connected Branches

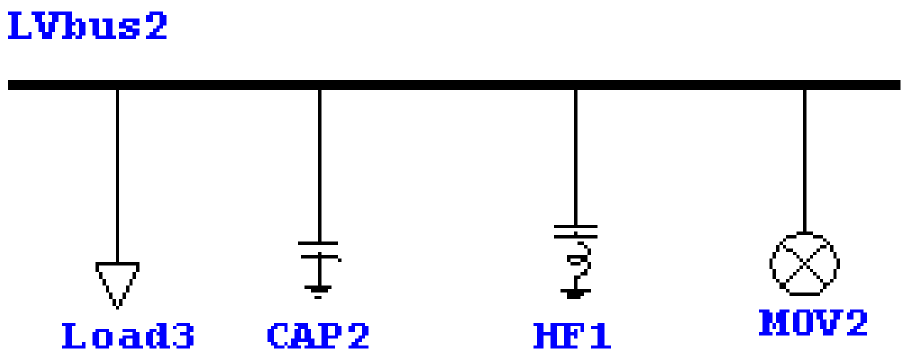
LVbus2
Load3
CAP2
HF1
MOV2

Short-Circuit Phenomenon

One-Line Diagram in PowerStation

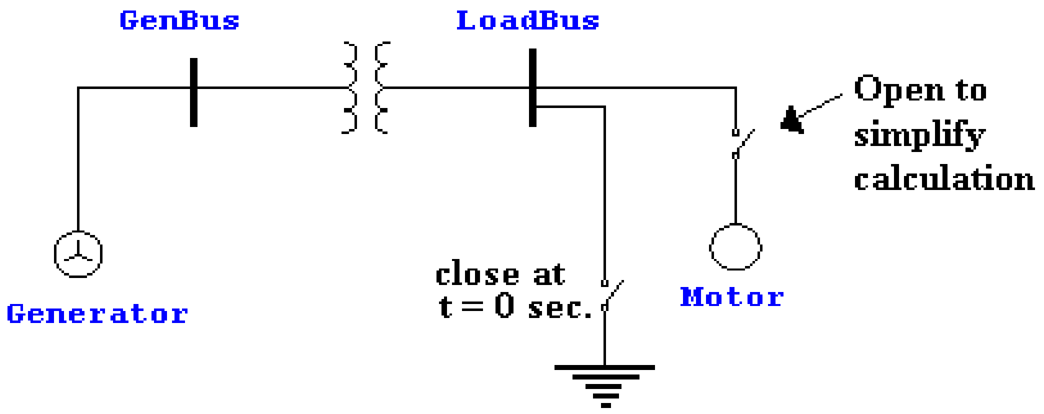
GenBus
LoadBus
Generator
Motor

Open to simplify calculation

close at t = 0 sec.

Equivalent Impedance Diagram

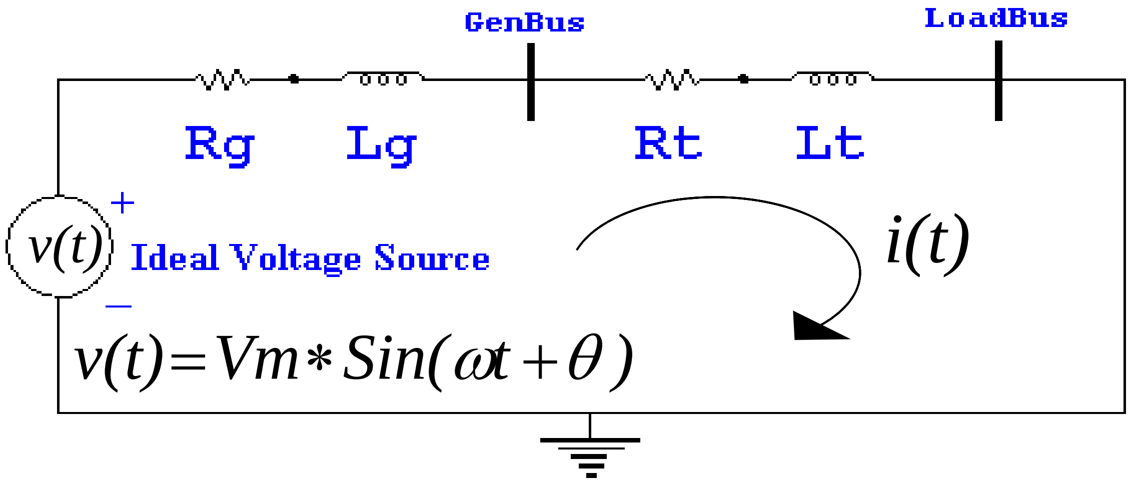
GenBus
LoadBus
Rg
Lg
Rt
Lt
v(t)
+
–
i(t)

Ideal Voltage Source

$$v(t) = Vm * Sin(\omega t + \theta)$$

Thevenin Equivalent

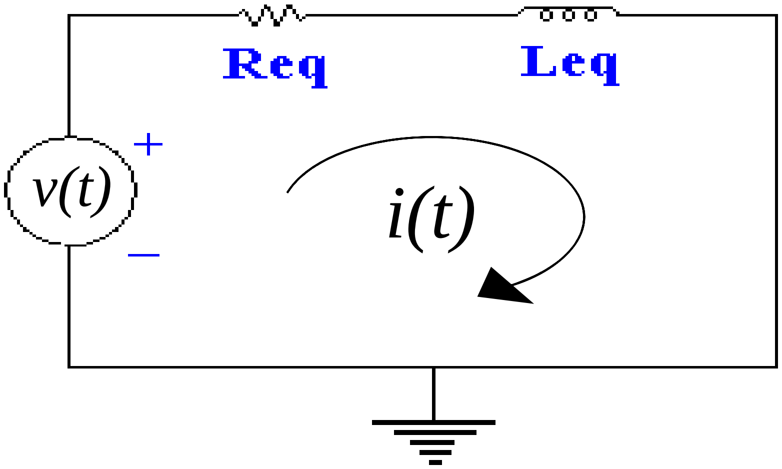

$$v(t) = Ri + L\frac{di}{dt} = Vm \times Sin(\omega t + \theta) \qquad (1)$$

Solving equation 1 yields the following expression

$$i(t) = \underbrace{\frac{Vm}{|Z|} \times \sin(\omega t + \theta - \phi)}_{\text{Steady State}} + \underbrace{\frac{Vm}{|Z|} \times \sin(\theta - \phi) \times e^{-\frac{R}{L}t}}_{\text{Transient (DC Offset)}}$$

AC Current (Symmetrical) with No AC Decay

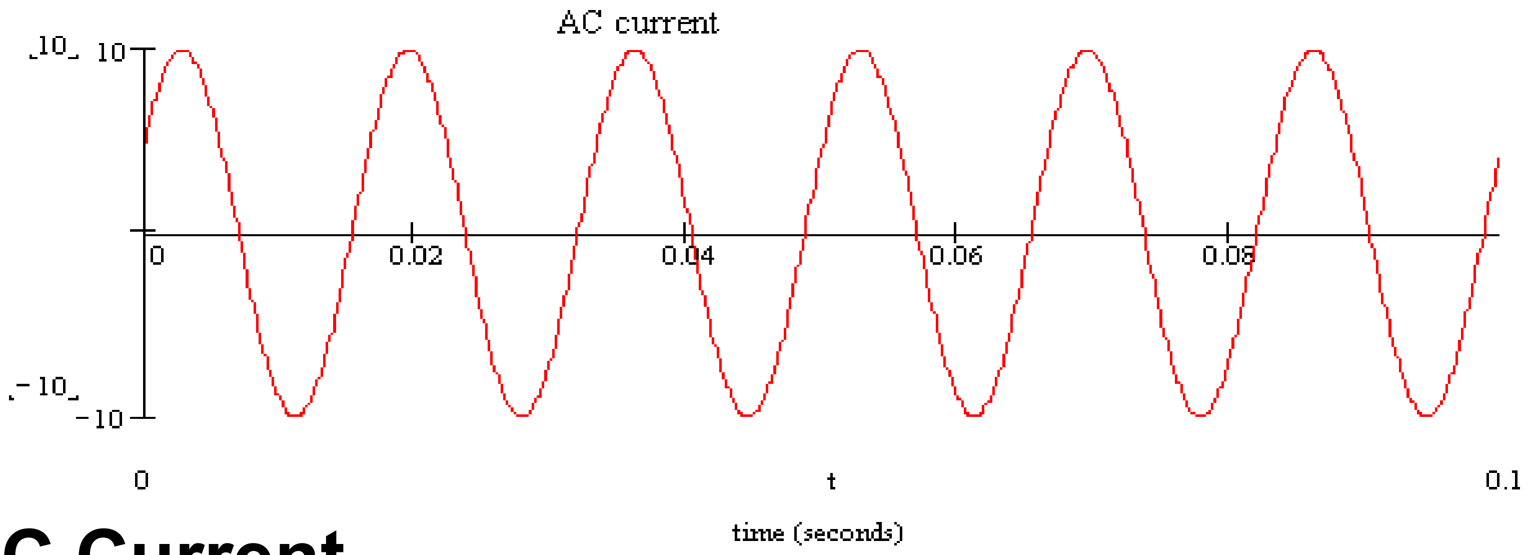

DC Current

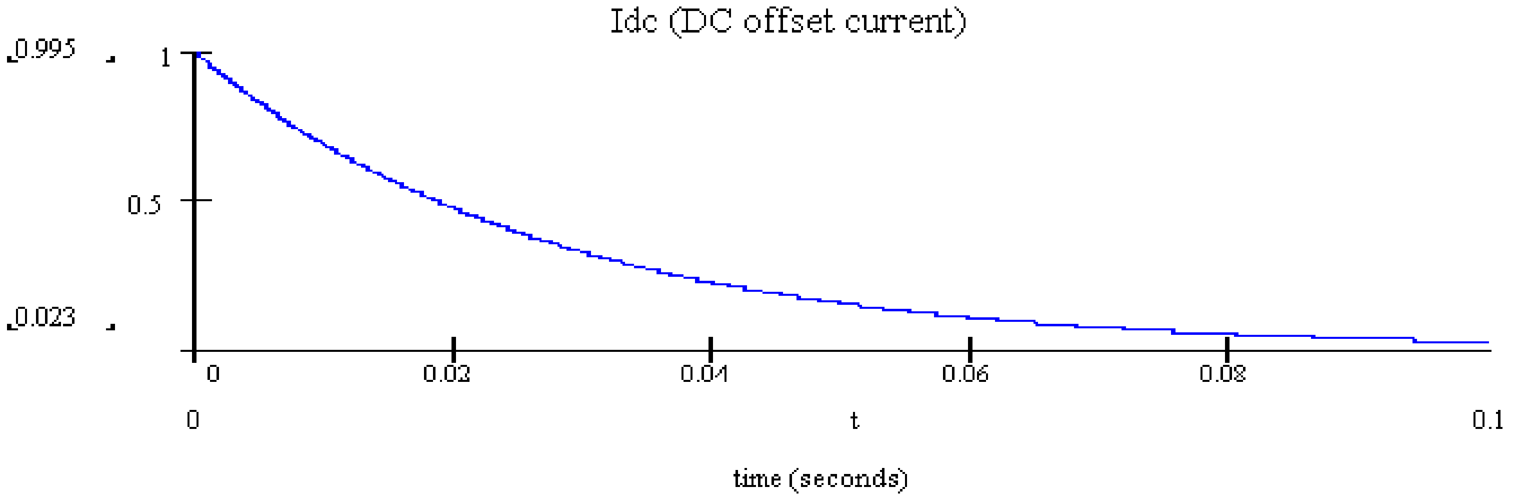

AC Fault Current Including the DC Offset (No AC Decay)

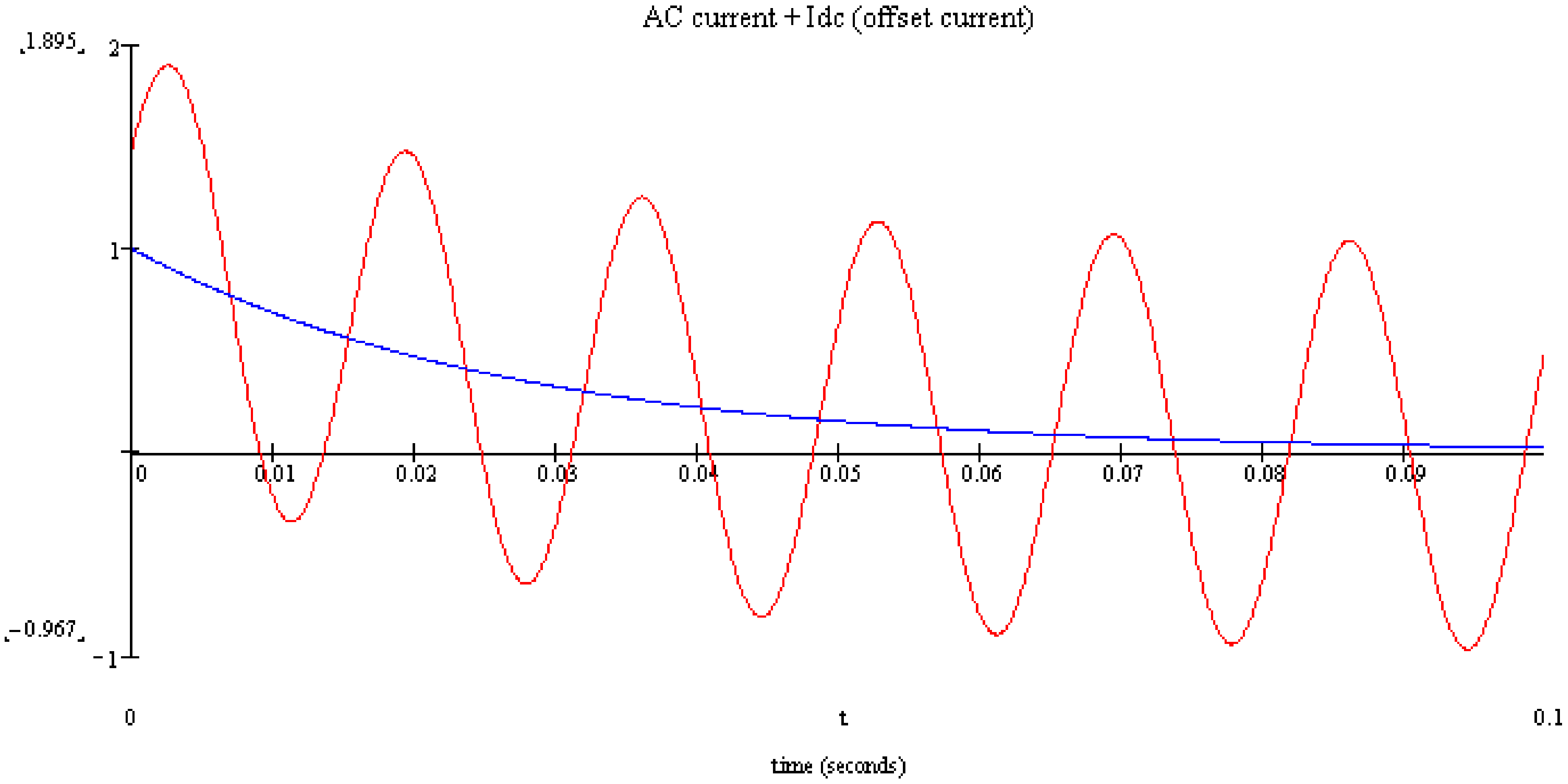

Machine Reactance (λ = L I)

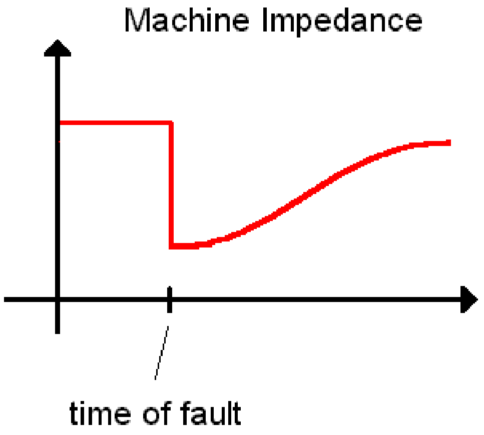
Machine Impedance
time of fault

AC Decay Current

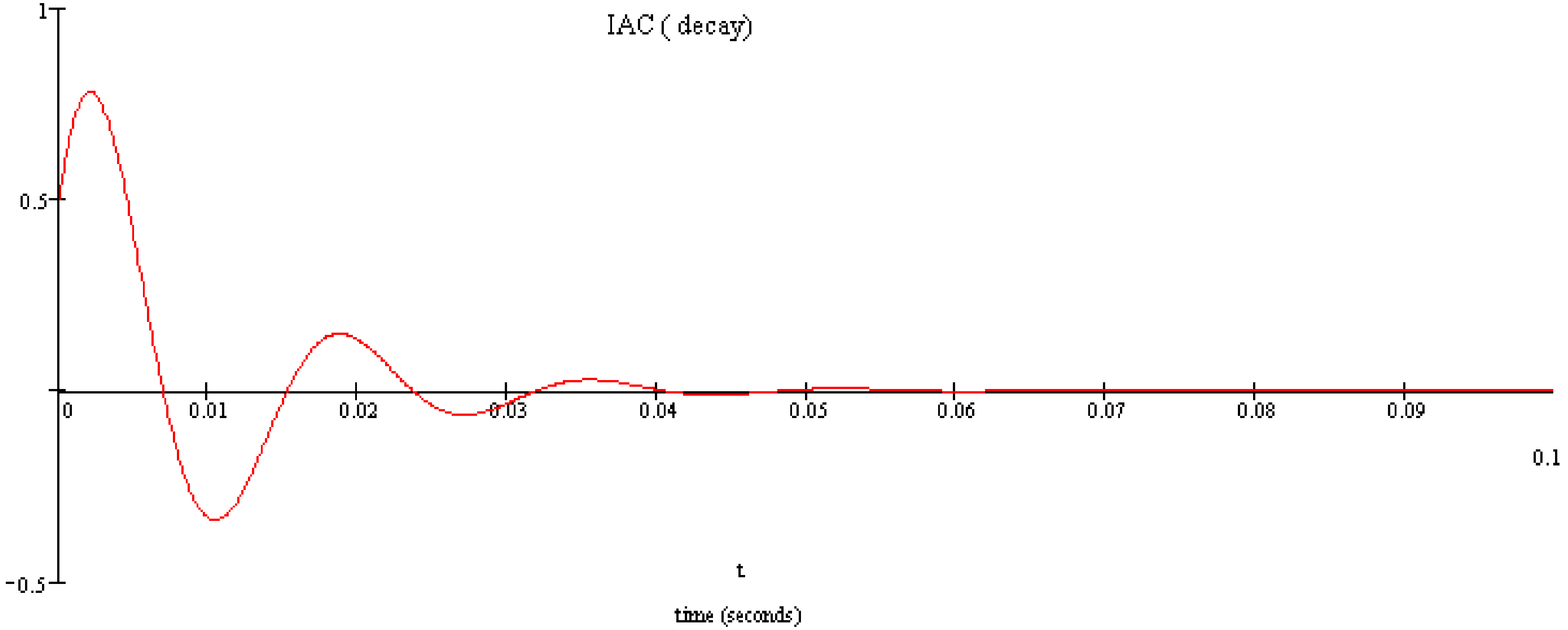

Fault Current Including AC & DC Decay

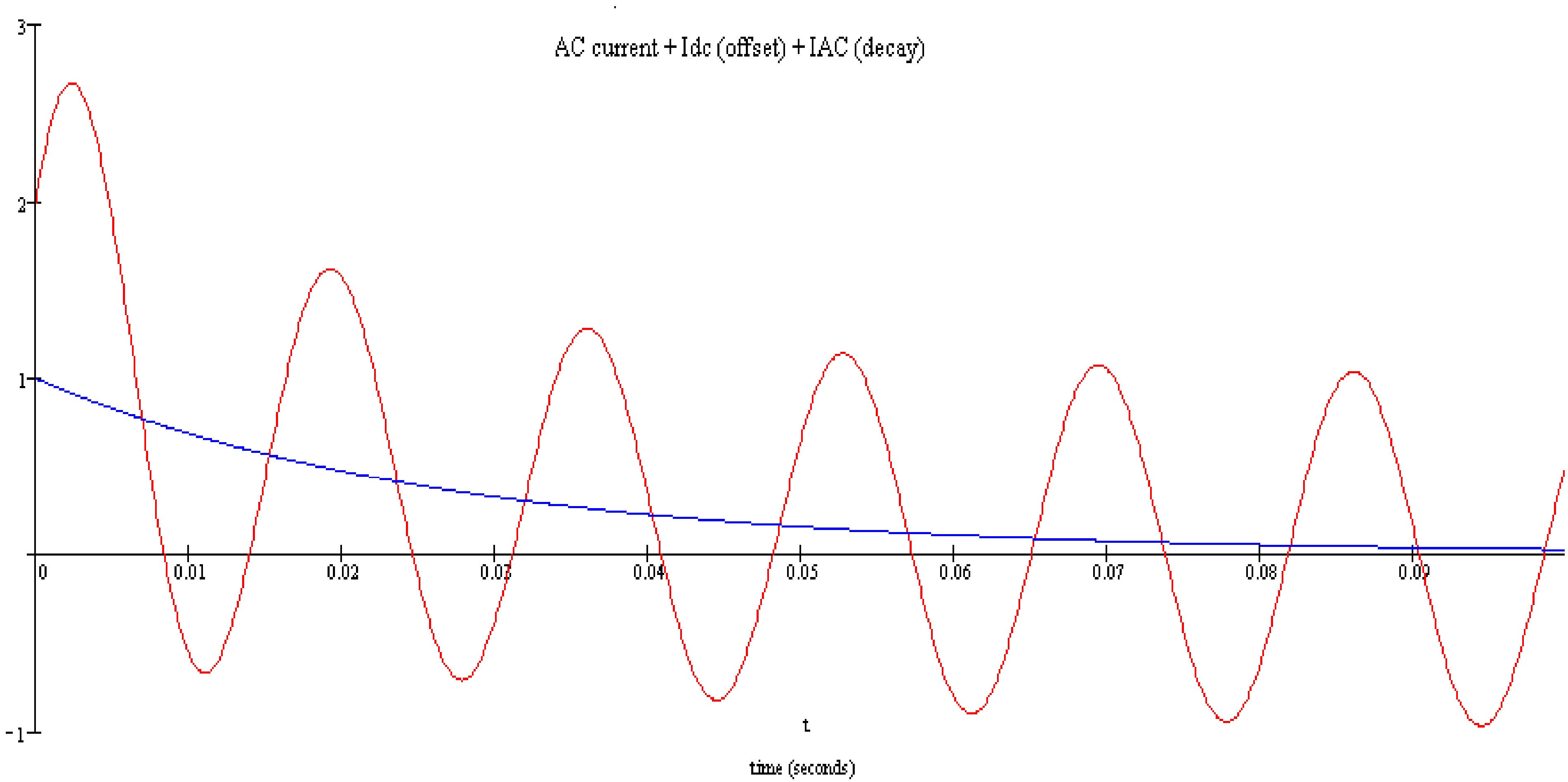

ANSI Calculation Methods

1) The ANSI standards handle the AC Decay by varying machine impedance during a fault.

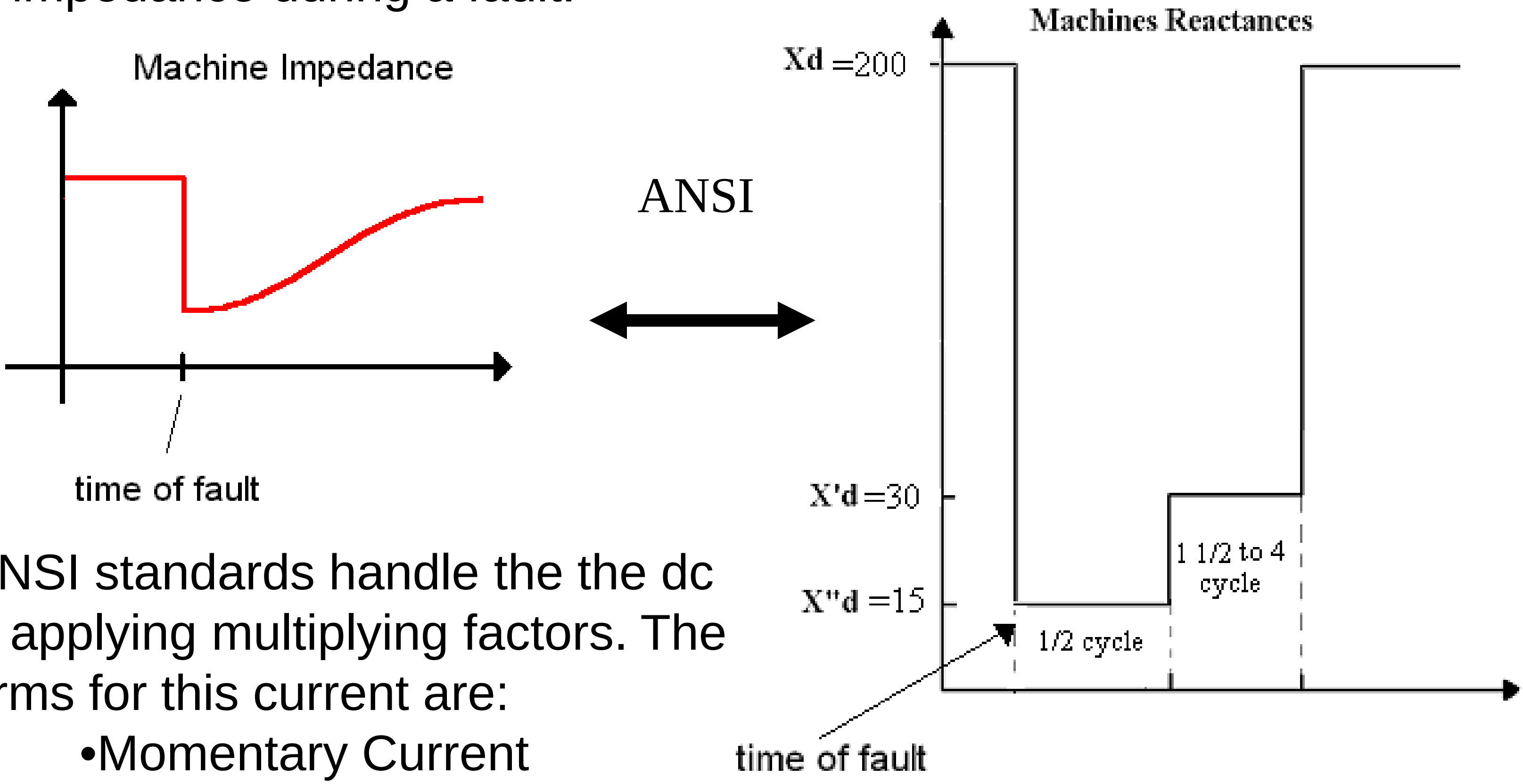
Machine Impedance
time of fault
ANSI
Machines Reactances
Xd =200
X'd=30
X"d =15
1 1/2 to 4 cycle
1/2 cycle
time of fault

2) The ANSI standards handle the the dc offset by applying multiplying factors. The ANSI Terms for this current are:

- Momentary Current
- Close and Latch Current
- First Cycle Asymmetrical Current

Sources and Models of Fault Currents in ANSI Standards

Sources

- Synchronous Generators
- Synchronous Motors & Condensers
- Induction Machines
- Electric Utility Systems (Power Grids)

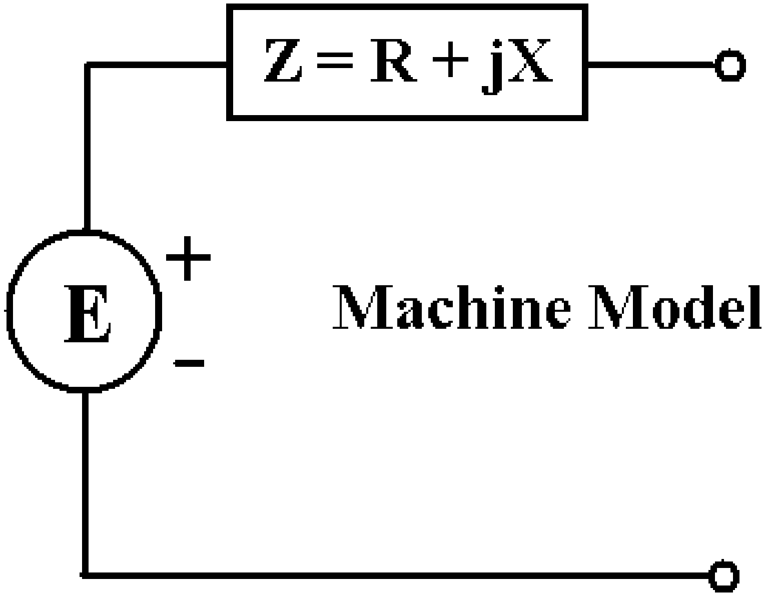

Models

All sources are modeled by an internal voltage behind its impedance.

E = Prefault Voltage
R = Machine Armature Resistance
X = Machine Reactance (X"d, X'd, Xd)

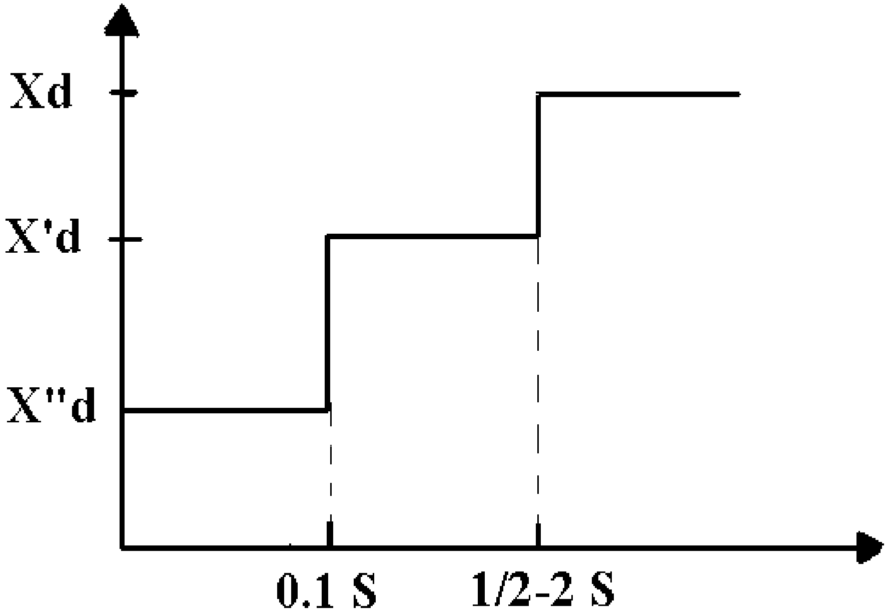

Synchronous Machines Reactances

Xd	Synchronous Reactance
X'd	Transient Reactance
X"d	Subtransient Reactance

Synchronous Generators

Synchronous Generators are modeled in three stages.

Synchronous Motors & Condensers

Act as a generator to supply fault current. This current diminishes as the magnetic field in the machine decays.

Induction Machines

Treated the same as synchronous motors except they do not contribute to the fault after 2 sec.

Electric Utility Systems

The fault current contribution tends to remain constant.

½ Cycle Network

This is the network used to calculate momentary short-circuit current and protective device duties at the ½ cycle after the fault.

1 ½ to 4 Cycle Network

This network is used to calculate the interrupting short-circuit current and protective device duties 1.5-4 cycles after the fault.

30-Cycle Network

This is the network used to calculate the steady-state short-circuit current and settings for over current relays after 30 cycles.

Reactance Representation for Utility and Synchronous Machine

	½ Cycle	1 ½ to 4 Cycle	30 Cycle
Utility	X”d	X”d	X”d
Turbo Generator	X”d	X”d	X’d
Hydro-Gen with Amortisseur winding	X”d	X”d	X’d
Hydro-Gen without Amortisseur winding	0.75*X”d	0.75*X”d	X’d
Condenser	X”d	X”d	α
Synchronous Motor	X”d	1.5*X”d	α

Reactance Representation for Induction Machine

	½ Cycle	1 ½ to 4 Cycle
>1000 hp , <= 1800 rpm	X”d	1.5*X”d
>250, at 3600 rpm	X”d	1.5*X”d
All others, >= 50 hp	1.2*X”d	3.0*X”d
< 50 hp	1.67*X”d	α

Note: X”d = 1 / LRC_{pu}

Device Duty and Usage of Fault Currents from Different Networks

	½ Cycle Currents (Subtransient Network)	1 ½ to 4 Cycle Currents (Transient Network)
HV Circuit Breaker	Closing and Latching Capability	Interrupting Capability
LV Circuit Breaker	Interrupting Capability	---
Fuse	Interrupting Capability	---
SWGR / MCC	Bus Bracing	---
Relay	Instantaneous Settings	---

30 Cycle currents are used for determining overcurrent settings.

Momentary Multiplying Factor

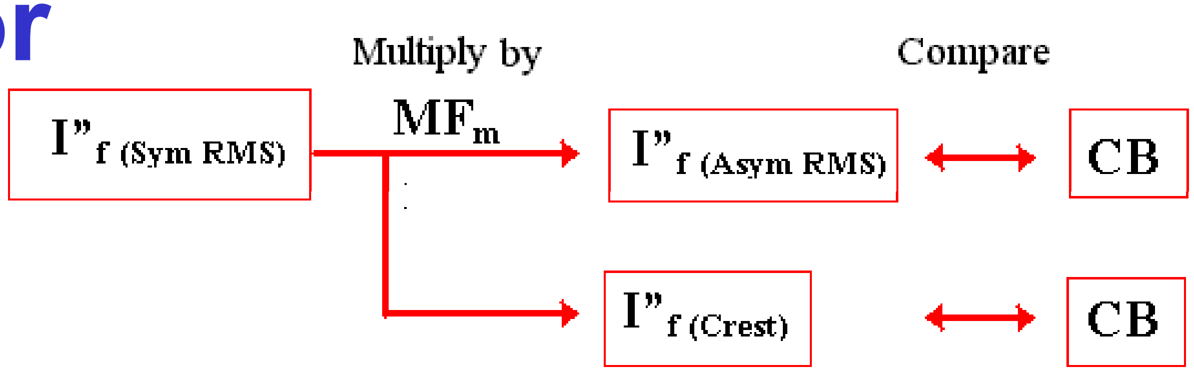

$I''_{f\ (Sym\ RMS)}$

Multiply by MF_m

$I''_{f\ (Asym\ RMS)}$ Compare CB

$I''_{f\ (Crest)}$ CB

MF_m is calculated based on:

- Fault X/R (Separate R & X Networks)
- Location of fault (Remote / Local generation)

Comparisons of Momentary capability (1/2 Cycle)

	SC Current Duty	Device Rating
HV CB	Asymmetrical RMS Crest	C&L RMS C&L RMS
HV Bus	Asymmetrical RMS Crest	Asymmetrical RMS Crest
LV Bus	Symmetrical RMS Asymmetrical RMS	Symmetrical RMS Asymmetrical RMS

Interrupting Multiplying Factor

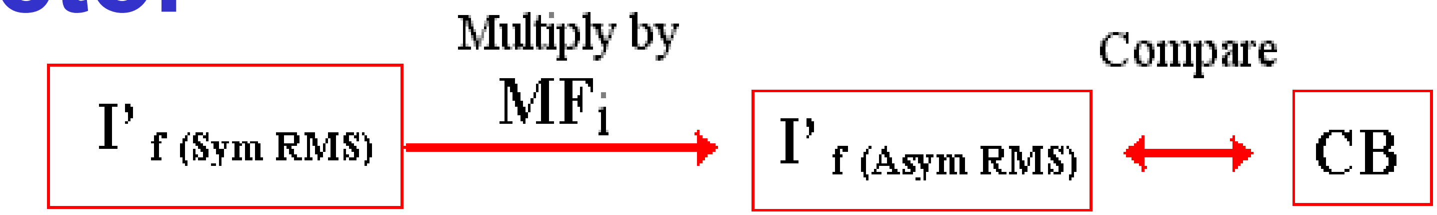

$I'_{f\,(Sym\ RMS)}$

Multiply by MF_i

$I'_{f\,(Asym\ RMS)}$

Compare

CB

MF_i is calculated based on:

- Fault X/R (Separate R & X Networks)
- Location of Fault (Remote / Local generation)
- Type and Rating of CB

Comparisons of Interrupting Capability (1 ½ to 4 Cycle)

	SC Current Duty	**Device Rating**
HV CB	Adj. Symmetrical RMS*	Adj. Symmetrical RMS*
LV CB & Fuse	Adj. Symmetrical RMS***	Symmetrical RMS

HV CB Closing and Latching Duty

Calculate ½ Cycle Current ($I_{mom, rms, sym}$) using ½ Cycle Network.

- **Calculate X/R ratio and Multiplying factor MF_m**
- **$I_{mom, rms, Asym} = MF_m * I_{mom, rms, sym}$**

HV CB Interrupting Duty

Calculate 1½ to 4 Cycle Current ($I_{mom,\ rms,\ sym}$) using ½ Cycle Network.

- Determine Local and Remote contributions (A “local” contribution is fed predominantly from generators through no more than one transformation or with external reactances in series that is less than 1.5 times generator subtransient reactance. Otherwise the contribution is defined as “remote”).

- Calculate no AC Decay ratio (NACD) and multiplying factor MF_i

$$NACD = I_{Remote} / I_{Total}$$
$$I_{Total} = I_{Local} + I_{Remote}$$

(NACD = 0 if all local & NACD = 1 if all remote)

- Calculate $I_{int,\ rms,\ adj} = MF_i * I_{int,\ rms,\ Symm}$

HV CB Interrupting Capability

- CB Interrupting kA varies between Max kA and Rated kA as applied kV changes – MVAsc capability.

- ETAP’s comparison between CB Duty of Adj. Symmetrical kA and CB capability of Adjusted Int. kA verifies both symmetrical and asymmetrical rating.

- The Option of C37.010-1999 standard allows user to specify CPT.

- Generator CB has higher DC rating and is always compared against maximum through SC kA.

LV CB Interrupting Duty

- LV CB take instantaneous action.
- Calculate ½ Cycle current $I_{rms,\ Symm}$ (I'_f) from the ½ cycle network.
- Calculate X/R ratio and MF_i (based on CB type).
- Calculate adjusted interrupting current $I_{adj,\ rms,\ symm} = MF_i * I_{rms,\ Symm}$

Fuse Interrupting Duty

Calculate ½ Cycle current $I_{int, rms, symm}$ from ½ Cycle Network.

- **Same procedure to calculate $I_{int, rms, asymm}$ as for CB.**

L-G Faults

L-G Faults

Symmetrical Components

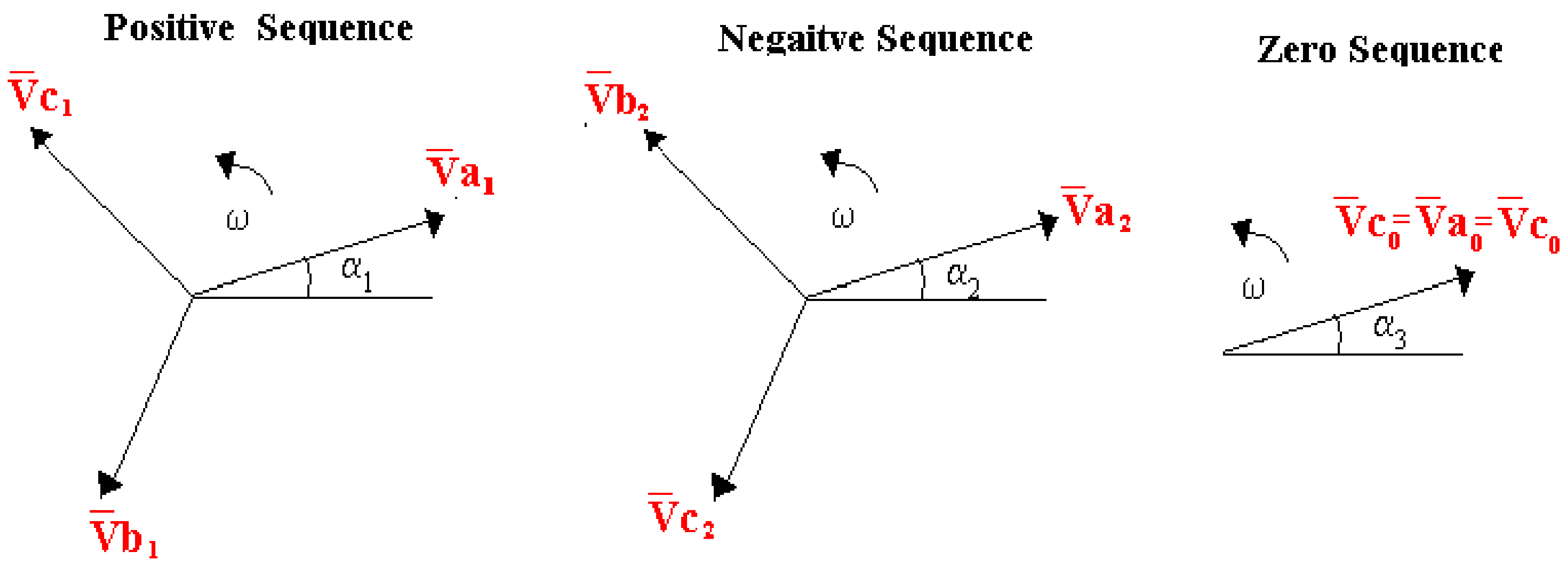
Positive Sequence
$\overline{V}c_1$
ω
$\overline{V}a_1$
α_1
$\overline{V}b_1$
Negaitve Sequence
$\overline{V}b_2$
ω
$\overline{V}a_2$
α_2
$\overline{V}c_2$
Zero Sequence
ω
$\overline{V}c_0 = \overline{V}a_0 = \overline{V}c_0$
α_3

Sequence Networks

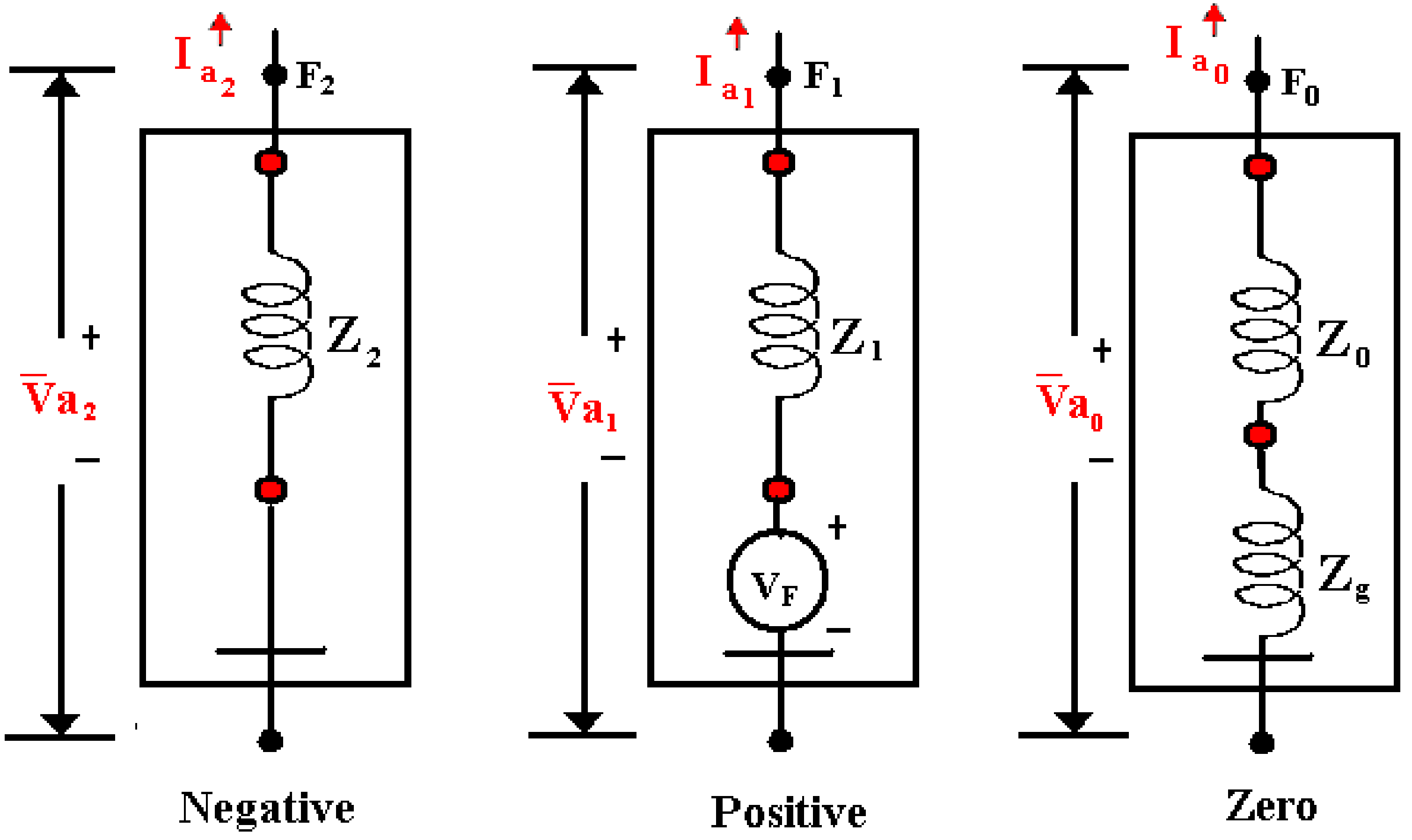
I_{a_2}
F_2
Z_2
+
$\overline{V}a_2$
–
Negative
I_{a_1}
F_1
Z_1
+
$\overline{V}a_1$
–
V_F
+
–
Positive
I_{a_0}
F_0
Z_0
Z_g
+
$\overline{V}a_0$
–
Zero

L-G Fault Sequence Network Connections

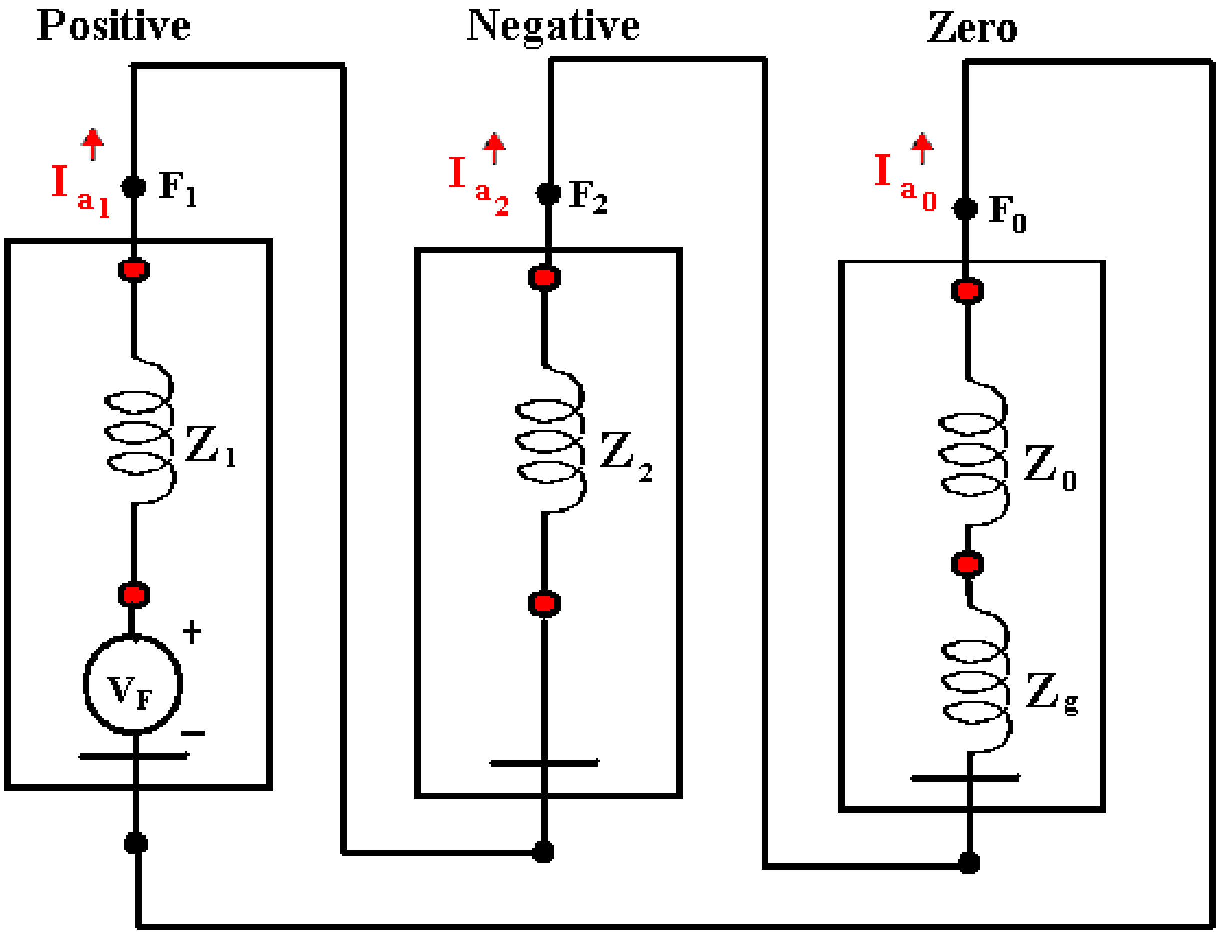
Positive
Negative
Zero
I_{a_1}
F_1
I_{a_2}
F_2
I_{a_0}
F_0
Z_1
Z_2
Z_0
Z_g
V_F
+
−

$$I_f = 3 \times I_{a_0}$$

$$I_f = \frac{3 \times V_{Prefault}}{Z_1 + Z_2 + Z_0}$$

$$\text{if } Z_g = 0$$

L-L Fault Sequence Network Connections

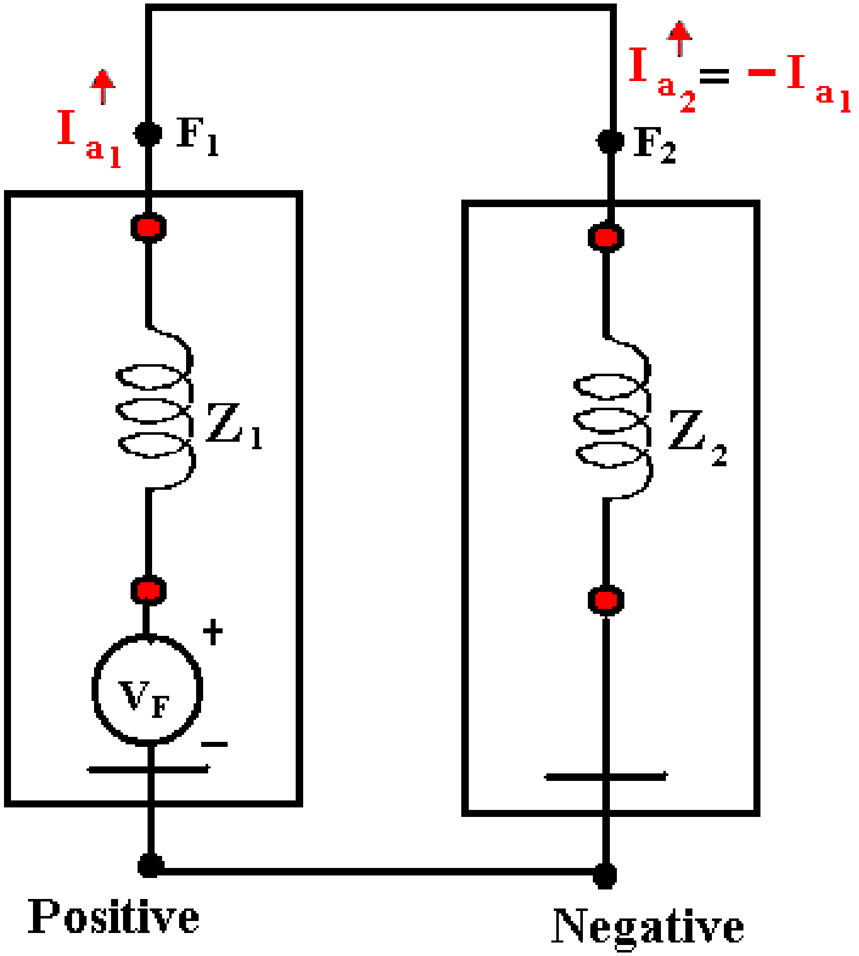
I_{a_1}
F₁
$I_{a_2} = -I_{a_1}$
F₂
Z₁
Z₂
+
V_F
–
Positive
Negative

$$I_{a_2} = -I_{a_1}$$

$$I_f = \frac{\sqrt{3} \times V_{Prefault}}{Z_1 + Z_2}$$

L-L-G Fault Sequence Network Connections

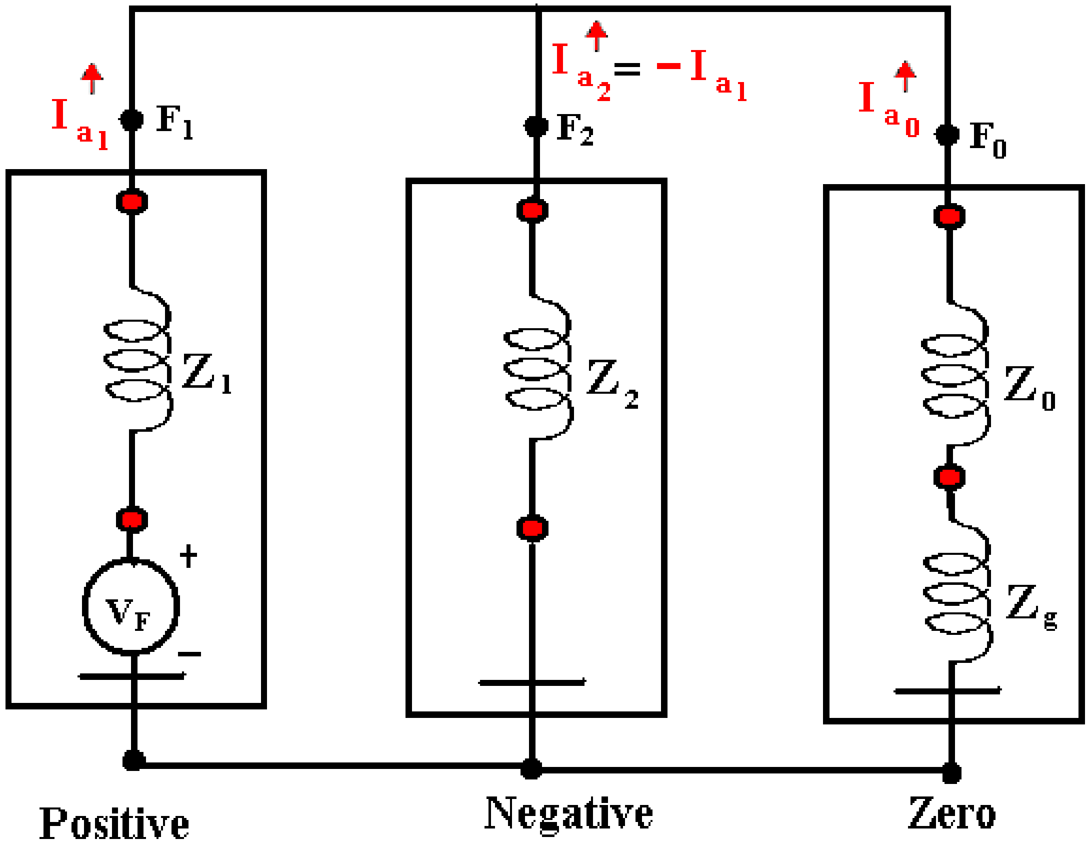
I_{a_1}
F_1
$I_{a_2} = -I_{a_1}$
F_2
I_{a_0}
F_0
Z_1
Z_2
Z_0
Z_g
+
V_F
–
Positive
Negative
Zero

$$I_{a_2} + I_{a_1} + I_{a_0} = 0 = I_a$$

$$I_f = \frac{V_{Prefault}}{Z_1 + \left(\frac{Z_0 Z_2}{Z_0 + Z_2}\right)}$$

$$\text{if } Z_g = 0$$

Transformer Zero Sequence Connections

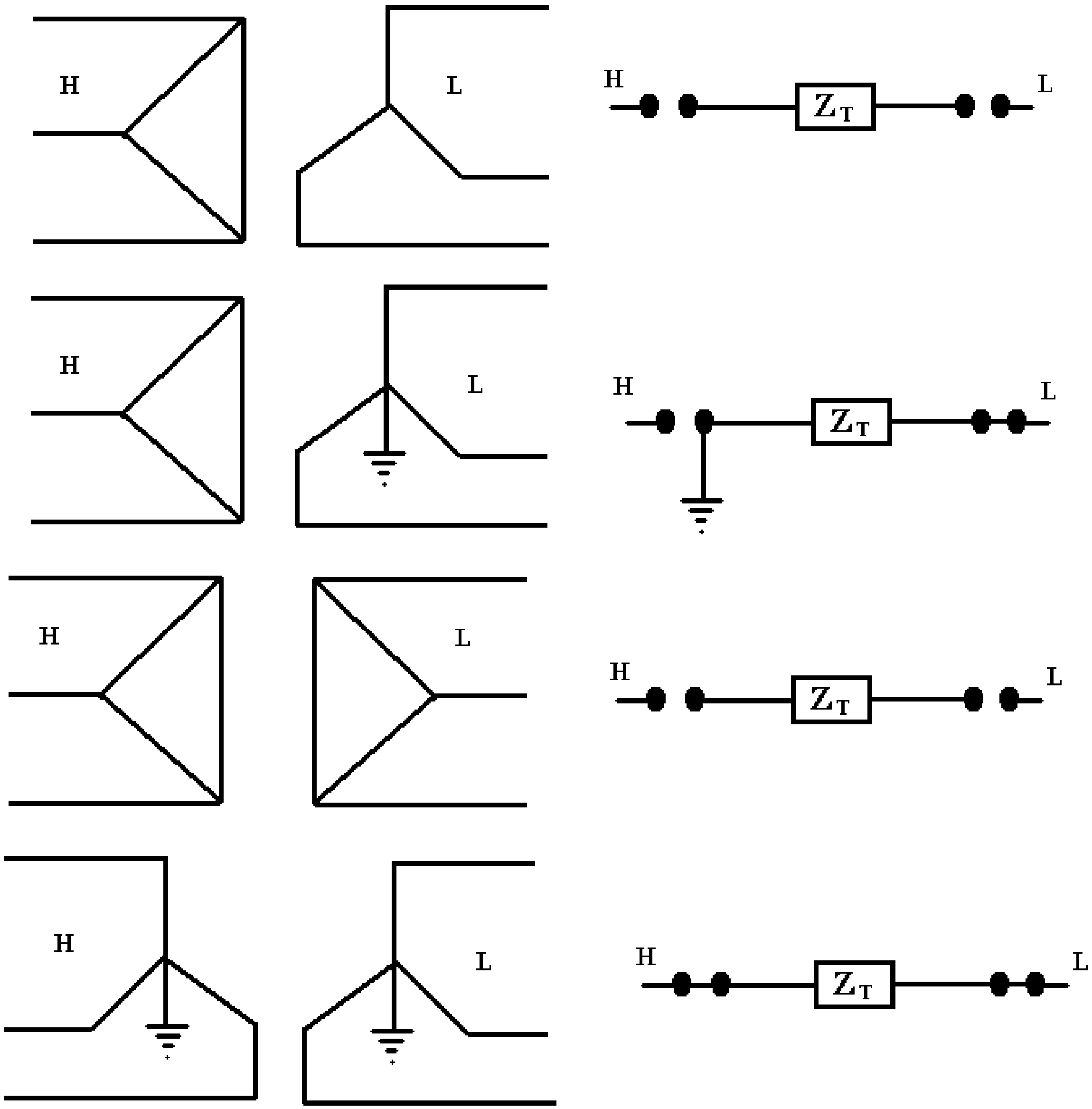
H
L
H
Z_T
L
H
L
H
Z_T
L
H
L
H
Z_T
L
H
L
H
Z_T
L

Solid Grounded Devices and L-G Faults

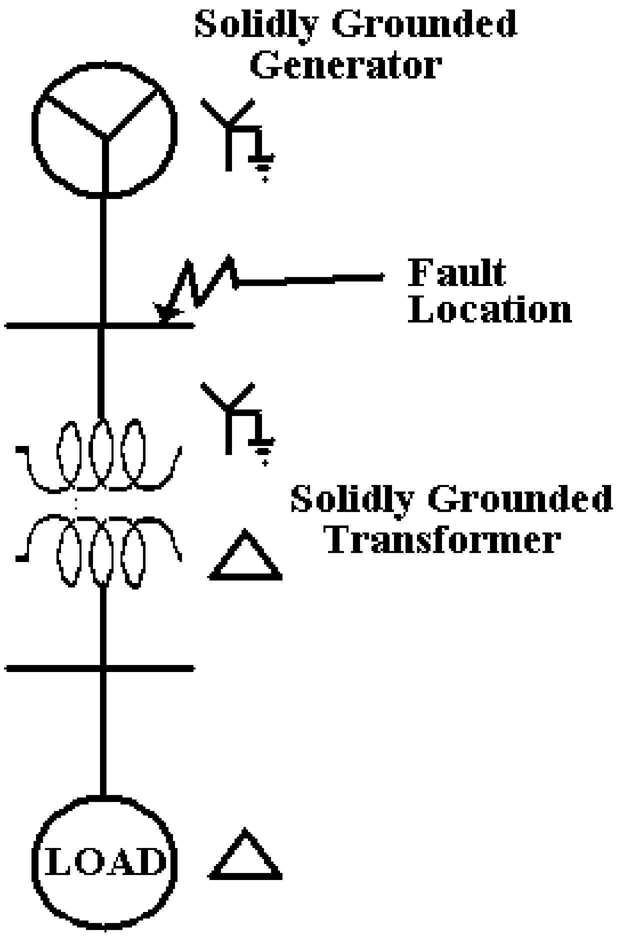
Solidly Grounded Generator
Fault Location
Solidly Grounded Transformer
LOAD

Generally a 3-phase fault is the most severe case. L-G faults can be greater if:

$Z_1 = Z_2 \;\&\; Z_0 < Z_1$

If this conditions are true then:

$\mathrm{I}_{f3\phi} < I_{f1\phi}$

This may be the case if Generators or Y/Δ Connected transformer are solidly grounded.

Unbalanced Faults Display & Reports

Complete reports that include individual branch contributions for:

- L-G Faults
- L-L-G Faults
- L-L Faults

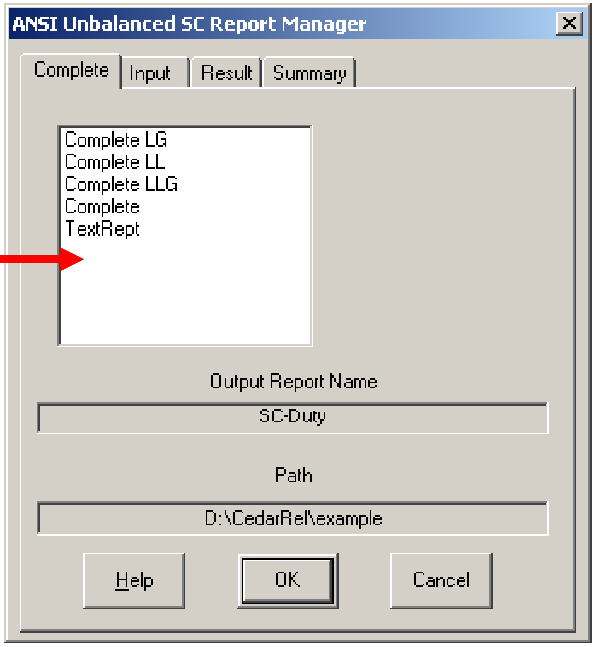
ANSI Unbalanced SC Report Manager

Complete | Input | Result | Summary

Complete LG
Complete LL
Complete LLG
Complete
TextRept

Output Report Name: SC-Duty

Path: D:\CedarRel\example

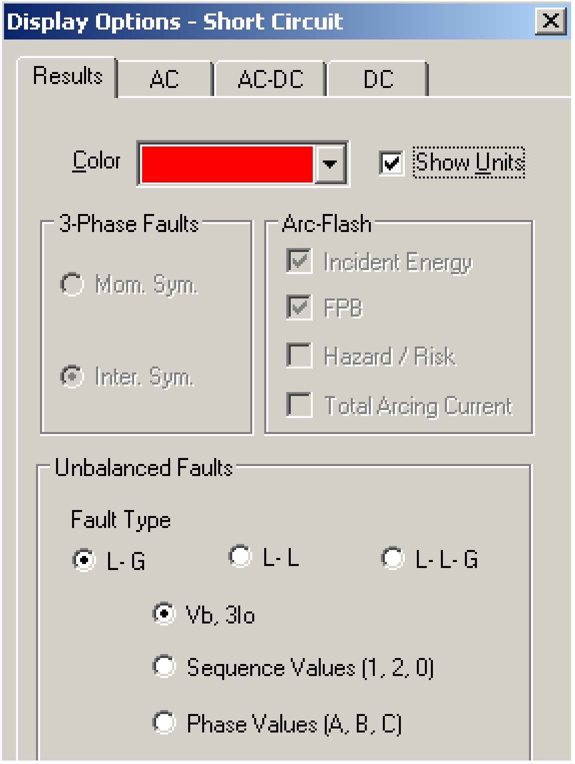
Display Options - Short Circuit

Color: 🟥 ☑ Show Units

3-Phase Faults
○ Mom. Sym.
● Inter. Sym.

Arc-Flash
☑ Incident Energy
☑ FPB
☐ Hazard / Risk
☐ Total Arcing Current

Unbalanced Faults
Fault Type
● L-G ○ L-L ○ L-L-G
● Vb, 3Io
○ Sequence Values (1, 2, 0)
○ Phase Values (A, B, C)

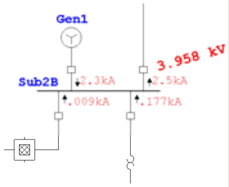

One-line diagram displayed results that include:

- L-G/L-L-G/L-L fault current contributions
- Sequence voltage and currents
- Phase Voltages

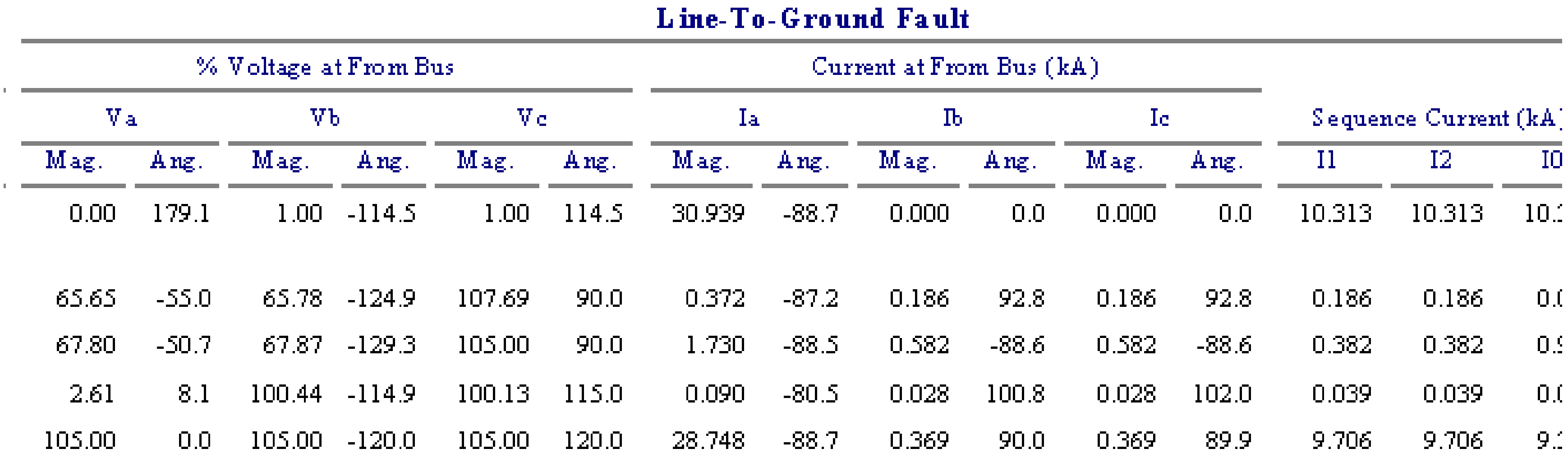

Line-To-Ground Fault

% Voltage at From Bus						Current at From Bus (kA)								
Va		Vb		Vc		Ia		Ib		Ic		Sequence Current (kA		
Mag.	Ang.	Mag.	Ang.	Mag.	Ang.	Mag.	Ang.	Mag.	Ang.	Mag.	Ang.	I1	I2	I0
0.00	179.1	1.00	-114.5	1.00	114.5	30.939	-88.7	0.000	0.0	0.000	0.0	10.313	10.313	10.
65.65	-55.0	65.78	-124.9	107.69	90.0	0.372	-87.2	0.186	92.8	0.186	92.8	0.186	0.186	0.
67.80	-50.7	67.87	-129.3	105.00	90.0	1.730	-88.5	0.582	-88.6	0.582	-88.6	0.382	0.382	0.
2.61	8.1	100.44	-114.9	100.13	115.0	0.090	-80.5	0.028	100.8	0.028	102.0	0.039	0.039	0.
105.00	0.0	105.00	-120.0	105.00	120.0	28.748	-88.7	0.369	90.0	0.369	89.9	9.706	9.706	9.

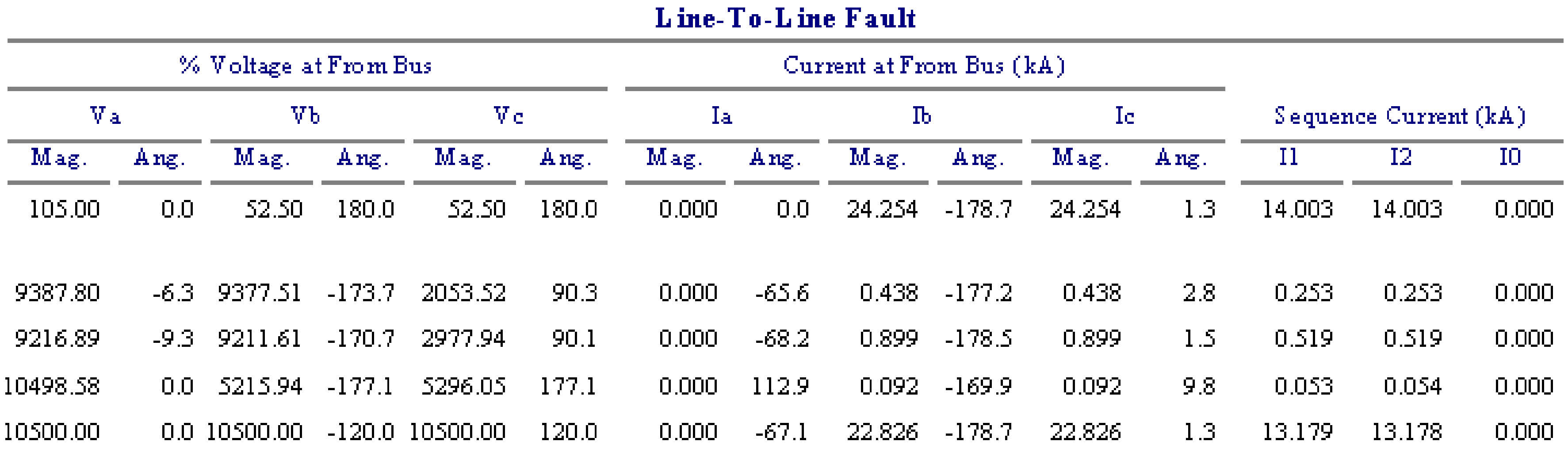

Line-To-Line Fault

% Voltage at From Bus						Current at From Bus (kA)								
Va		Vb		Vc		Ia		Ib		Ic		Sequence Current (kA)		
Mag.	Ang.	Mag.	Ang.	Mag.	Ang.	Mag.	Ang.	Mag.	Ang.	Mag.	Ang.	I1	I2	I0
105.00	0.0	52.50	180.0	52.50	180.0	0.000	0.0	24.254	-178.7	24.254	1.3	14.003	14.003	0.000
9387.80	-6.3	9377.51	-173.7	2053.52	90.3	0.000	-65.6	0.438	-177.2	0.438	2.8	0.253	0.253	0.000
9216.89	-9.3	9211.61	-170.7	2977.94	90.1	0.000	-68.2	0.899	-178.5	0.899	1.5	0.519	0.519	0.000
10498.58	0.0	5215.94	-177.1	5296.05	177.1	0.000	112.9	0.092	-169.9	0.092	9.8	0.053	0.054	0.000
10500.00	0.0	10500.00	-120.0	10500.00	120.0	0.000	-67.1	22.826	-178.7	22.826	1.3	13.179	13.178	0.000

Line-To-Line-To-Ground Fault

% Voltage at From Bus						Current at From Bus (kA)								
Va		Vb		Vc		Ia		Ib		Ic		Sequence Current (kA)		
Mag.	Ang.	Mag.	Ang.	Mag.	Ang.	Mag.	Ang.	Mag.	Ang.	Mag.	Ang.	I1	I2	I0
92.72	0.0	0.00	-129.8	0.00	129.8	0.000	0.0	29.772	145.9	29.787	36.8	19.763	8.244	0.000
6310.16	-9.3	6301.67	-170.6	2053.52	90.3	0.208	-87.3	0.450	169.4	0.450	16.1	0.357	0.149	0.000
6586.22	-13.0	6582.50	-166.9	2977.94	90.1	0.651	91.4	1.573	126.3	1.575	56.6	0.733	0.306	0.000
9359.59	0.1	283.76	-102.1	288.33	118.9	0.031	-78.8	0.098	169.3	0.099	30.3	0.075	0.031	0.000
10500.00	0.0	10500.00	-120.0	10500.00	120.0	0.413	-90.0	27.790	146.5	27.788	36.0	18.599	7.758	0.000

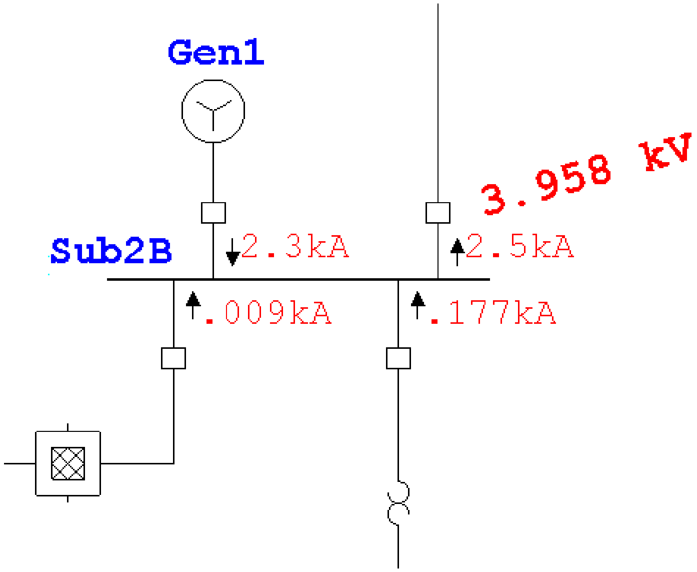

SC Study Case Info Page

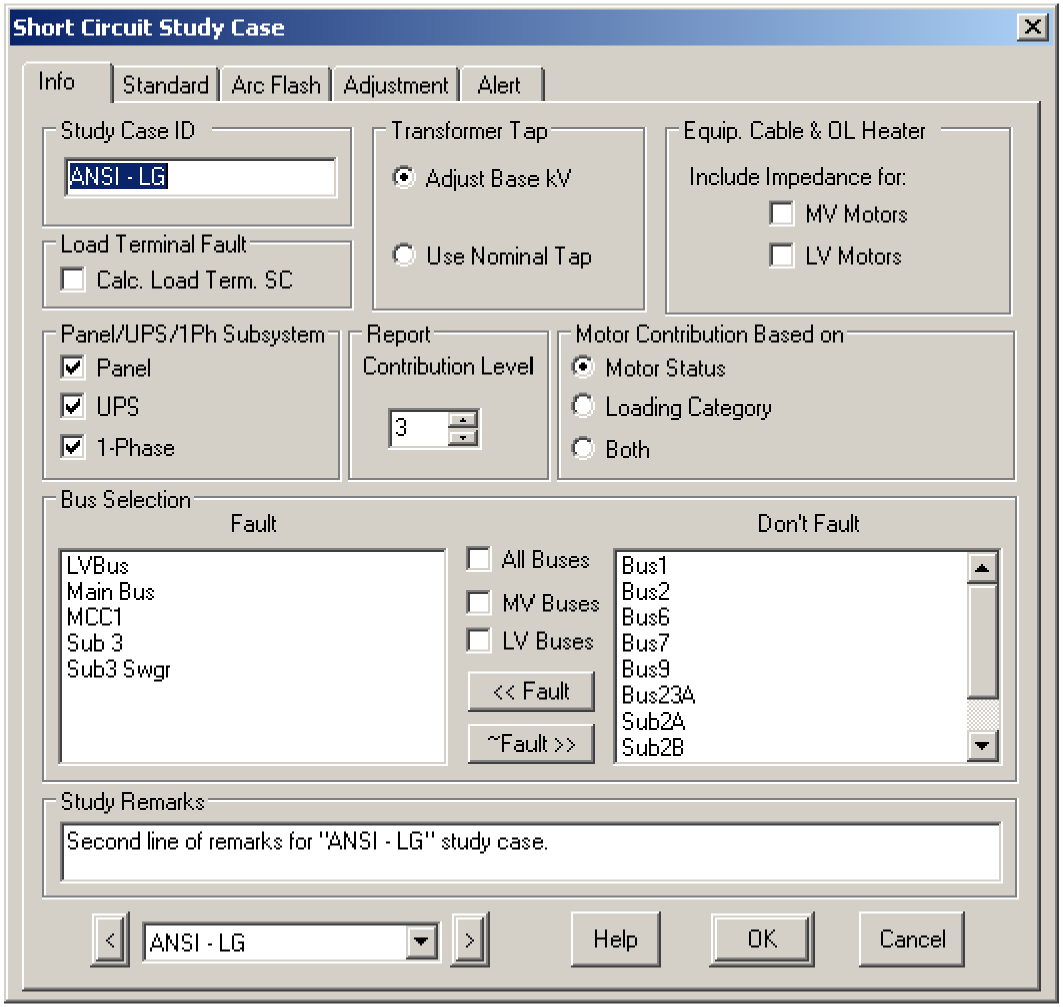

Short Circuit Study Case

Study Case ID: ANSI - LG

Load Terminal Fault
☐ Calc. Load Term. SC

Transformer Tap
● Adjust Base kV
○ Use Nominal Tap

Equip. Cable & OL Heater
Include Impedance for:
☐ MV Motors
☐ LV Motors

Panel/UPS/1Ph Subsystem
☑ Panel
☑ UPS
☑ 1-Phase

Report
Contribution Level: 3

Motor Contribution Based on
● Motor Status
○ Loading Category
○ Both

Bus Selection

Fault		Don't Fault
LVBus Main Bus MCC1 Sub 3 Sub3 Swgr	☐ All Buses ☐ MV Buses ☐ LV Buses	Bus1 Bus2 Bus6 Bus7 Bus9 Bus23A Sub2A Sub2B

Study Remarks: Second line of remarks for "ANSI - LG" study case.

ANSI - LG

SC Study Case Standard Page

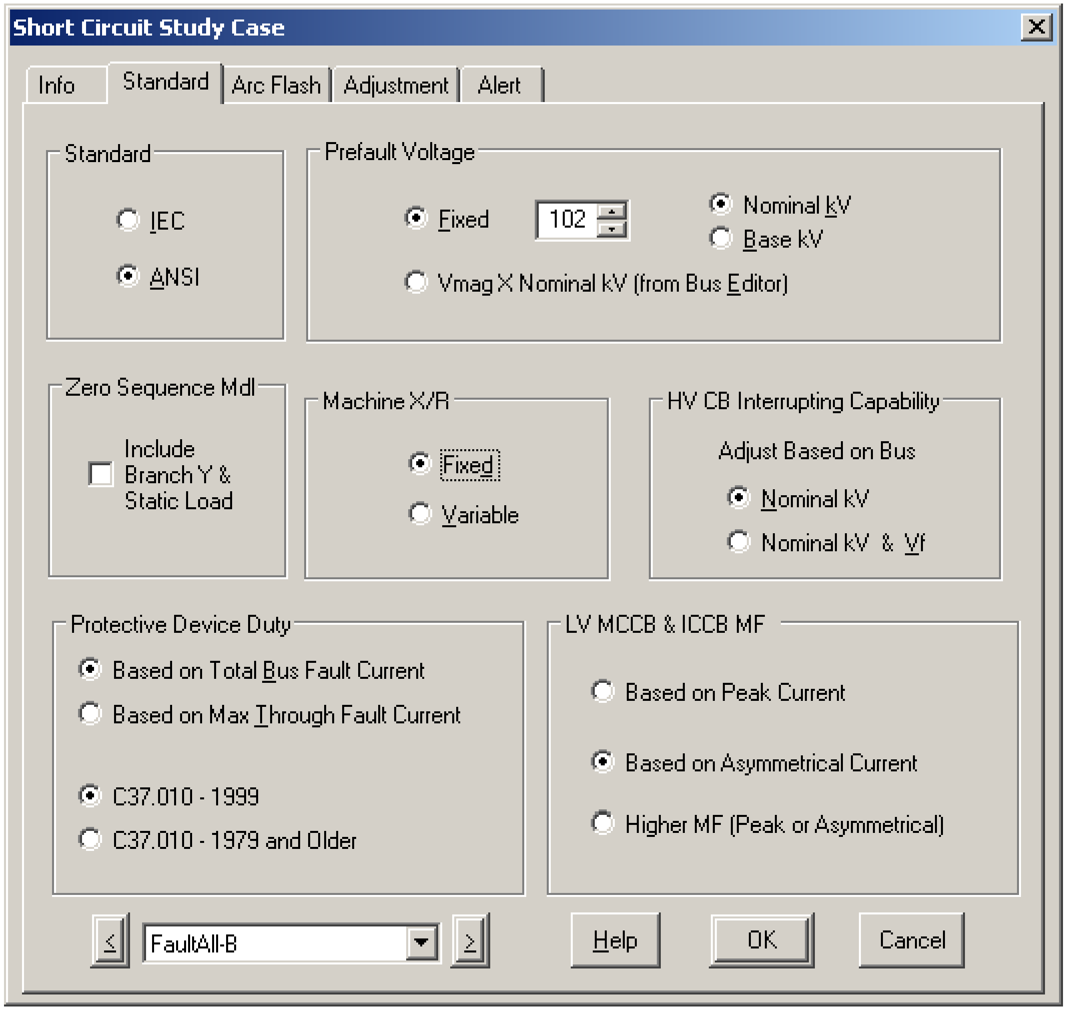

Short Circuit Study Case

Standard

○ IEC
● ANSI

Prefault Voltage

● Fixed 102
● Nominal kV
○ Base kV
○ Vmag X Nominal kV (from Bus Editor)

Zero Sequence Mdl

☐ Include Branch Y & Static Load

Machine X/R

● Fixed
○ Variable

HV CB Interrupting Capability

Adjust Based on Bus

● Nominal kV
○ Nominal kV & Vf

Protective Device Duty

● Based on Total Bus Fault Current
○ Based on Max Through Fault Current

● C37.010 - 1999
○ C37.010 - 1979 and Older

LV MCCB & ICCB MF

○ Based on Peak Current
● Based on Asymmetrical Current
○ Higher MF (Peak or Asymmetrical)

FaultAll-B

SC Study Case Adjustments Page

Tolerance Adjustments

- **Transformer Impedance**
- **Reactor Resistance**
- **Overload Heater Resistance**

Adjust Fault Impedance

- **L-G fault Impedance**

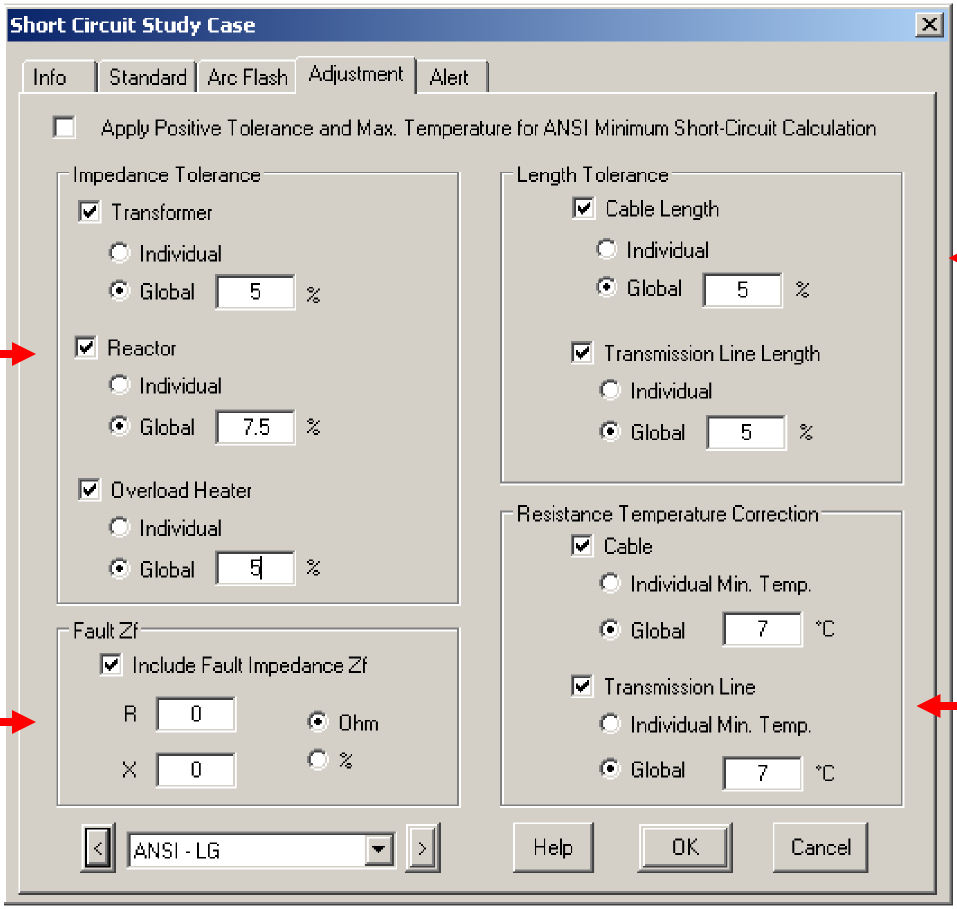

☐ Apply Positive Tolerance and Max. Temperature for ANSI Minimum Short-Circuit Calculation

Impedance Tolerance

☑ Transformer
○ Individual
● Global 5 %

☑ Reactor
○ Individual
● Global 7.5 %

☑ Overload Heater
○ Individual
● Global 5 %

Fault Zf

☑ Include Fault Impedance Zf
R 0 ● Ohm
X 0 ○ %

ANSI - LG

Length Tolerance

☑ Cable Length
○ Individual
● Global 5 %

☑ Transmission Line Length
○ Individual
● Global 5 %

Resistance Temperature Correction

☑ Cable
○ Individual Min. Temp.
● Global 7 °C

☑ Transmission Line
○ Individual Min. Temp.
● Global 7 °C

Length Adjustments

- **Cable Length**
- **Transmission Line Length**

Temperature Corrections

- **Transmission Line Resistance**
- **Cable Resistance**

Tolerance Adjustments

$$Z'_{Transformer} = Z_{Transformer} * (1 \pm Tolerance)$$

$$Length'_{Cable} = Length_{Cable} * (1 \pm Tolerance)$$

$$Length'_{TransmissionLine} = Length_{TransmissionLine} * (1 \pm Tolerance)$$

Positive tolerance value is used for IEC Minimum I_f calculation.

Negative tolerance value is used for all other calculations.

Adjustments can be applied Individually or Globally

Temperature Correction

$$R'_{Copper}{}' = R_{BASE} * \frac{(234.5 + Tc)}{(234.5 + Tb)}$$

$$R'_{Alumi} = R_{BASE} * \frac{(228.1 + Tc)}{(228.1 + Tb)}$$

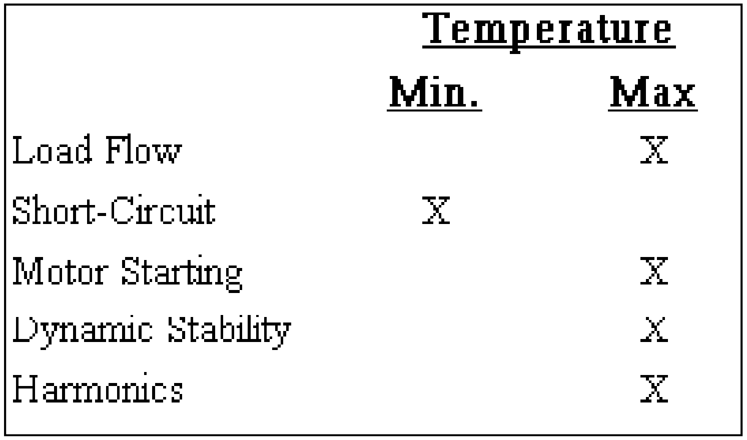

	Temperature	
	Min.	**Max**
Load Flow		X
Short-Circuit	X	
Motor Starting		X
Dynamic Stability		X
Harmonics		X

$R_{BASE} = Resistance\ at\ base\ tempereature$

$R' = Resistance\ at\ operating\ temperature$

$Tb = Conductor\ base\ temperature\ in\ C$

$Tc = Conductor\ temperature\ limit\ in\ C$

Temperature Correction can be applied Individually or Globally

System for SC Study

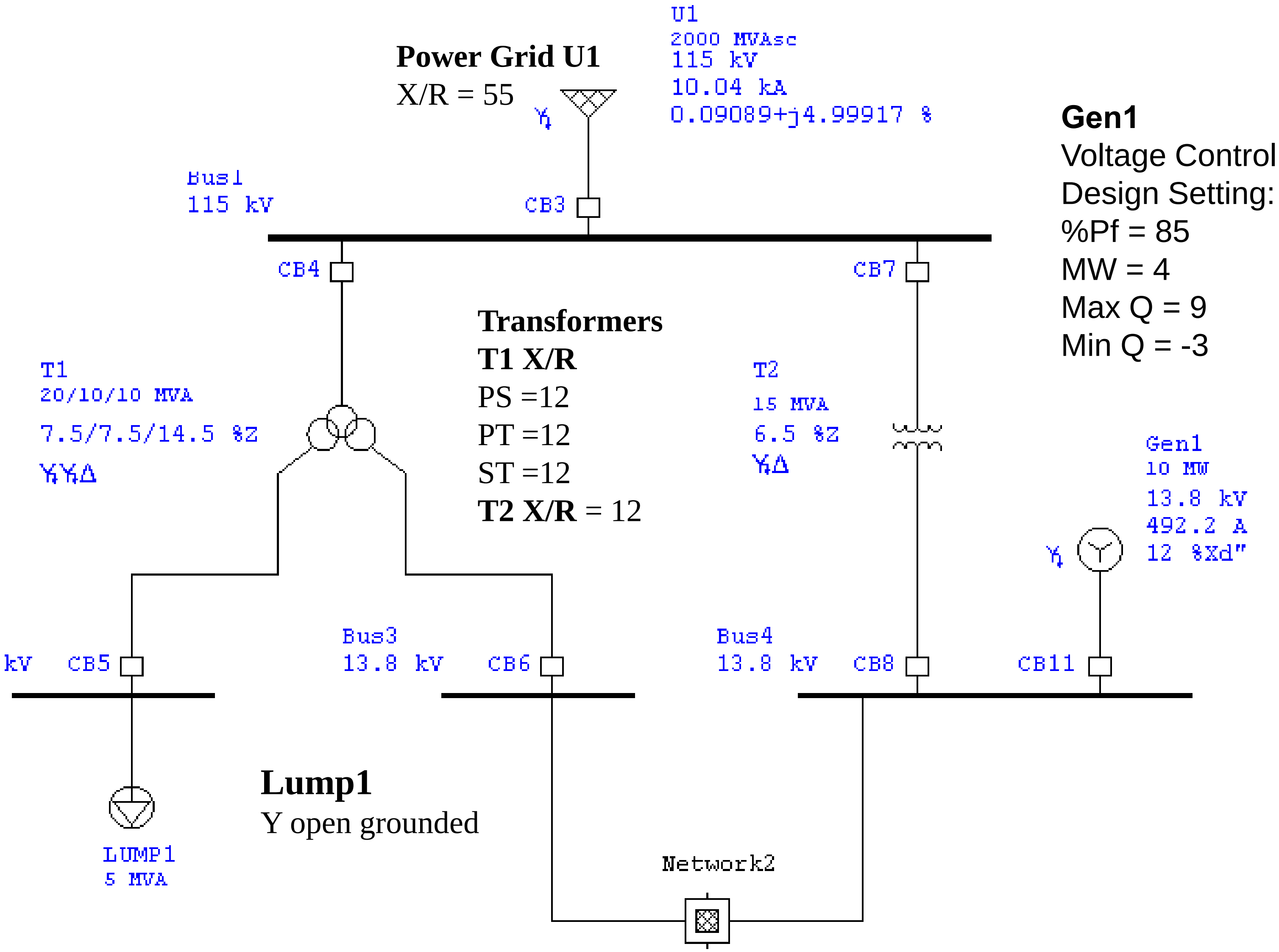
U1
2000 MVAsc
115 kV
10.04 kA
0.09089+j4.99917 %
Bus1
115 kV
CB3
CB4
CB7
T1
20/10/10 MVA
7.5/7.5/14.5 %Z
YYΔ
T2
15 MVA
6.5 %Z
YΔ
Gen1
10 MW
13.8 kV
492.2 A
12 %Xd"
kV
CB5
Bus3
13.8 kV
CB6
Bus4
13.8 kV
CB8
CB11
LUMP1
5 MVA
Network2

Power Grid U1
X/R = 55

Gen1
Voltage Control
Design Setting:
%Pf = 85
MW = 4
Max Q = 9
Min Q = -3

Transformers
T1 X/R
PS =12
PT =12
ST =12
T2 X/R = 12

Lump1
Y open grounded

System for SC Study

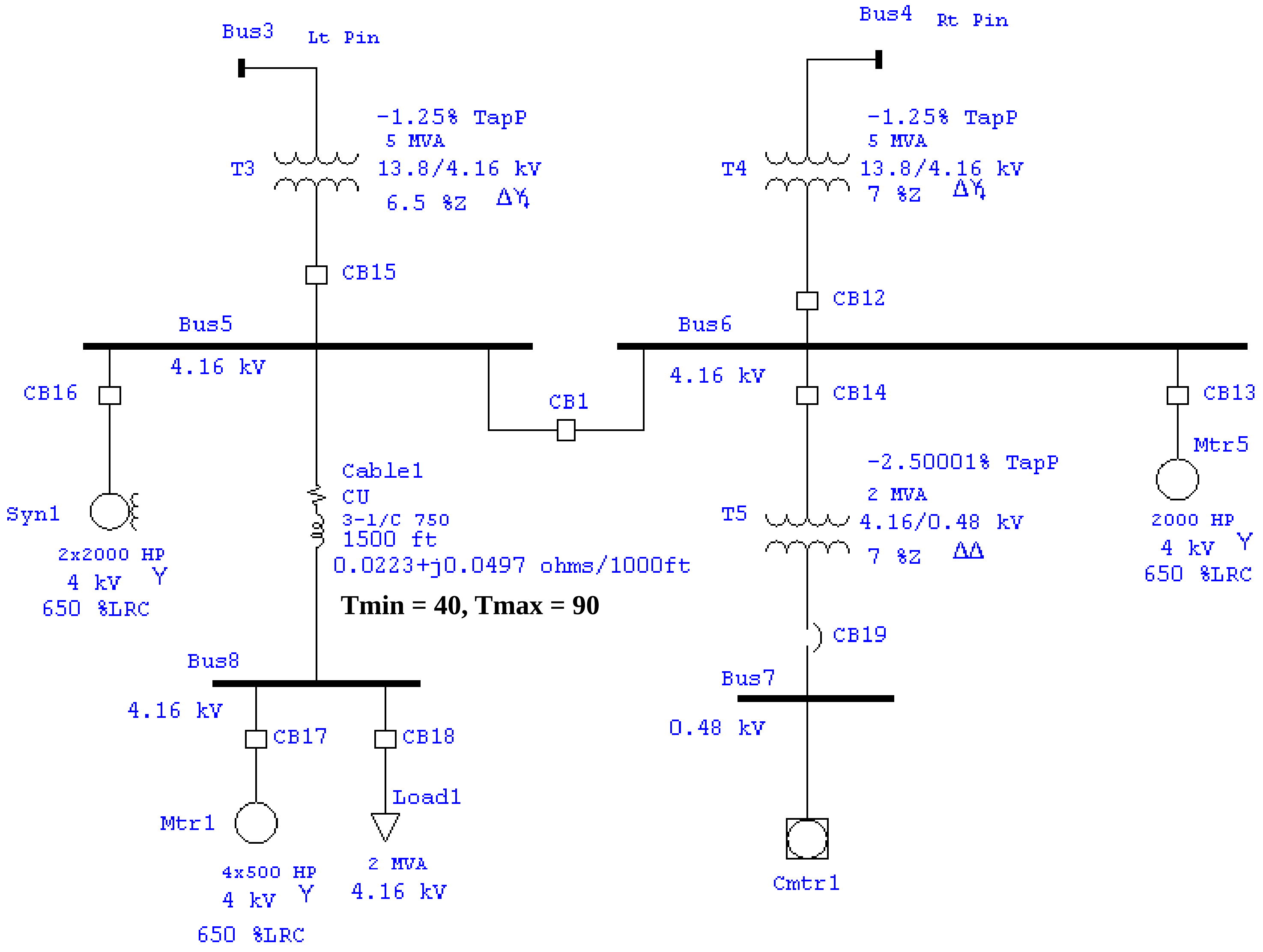
Bus3
Lt Pin
Bus4
Rt Pin
-1.25% TapP
5 MVA
T3
13.8/4.16 kV
6.5 %Z
ΔY
-1.25% TapP
5 MVA
T4
13.8/4.16 kV
7 %Z
ΔY
CB15
CB12
Bus5
4.16 kV
Bus6
4.16 kV
CB16
CB1
CB14
CB13
Mtr5
Cable1
CU
3-1/C 750
1500 ft
0.0223+j0.0497 ohms/1000ft
Tmin = 40, Tmax = 90
-2.50001% TapP
2 MVA
T5
4.16/0.48 kV
7 %Z
ΔΔ
2000 HP
4 kV
Y
650 %LRC
Syn1
2x2000 HP
4 kV
Y
650 %LRC
CB19
Bus8
4.16 kV
Bus7
0.48 kV
CB17
CB18
Load1
Mtr1
4x500 HP
4 kV
Y
650 %LRC
2 MVA
4.16 kV
Cmtr1

System for SC Study

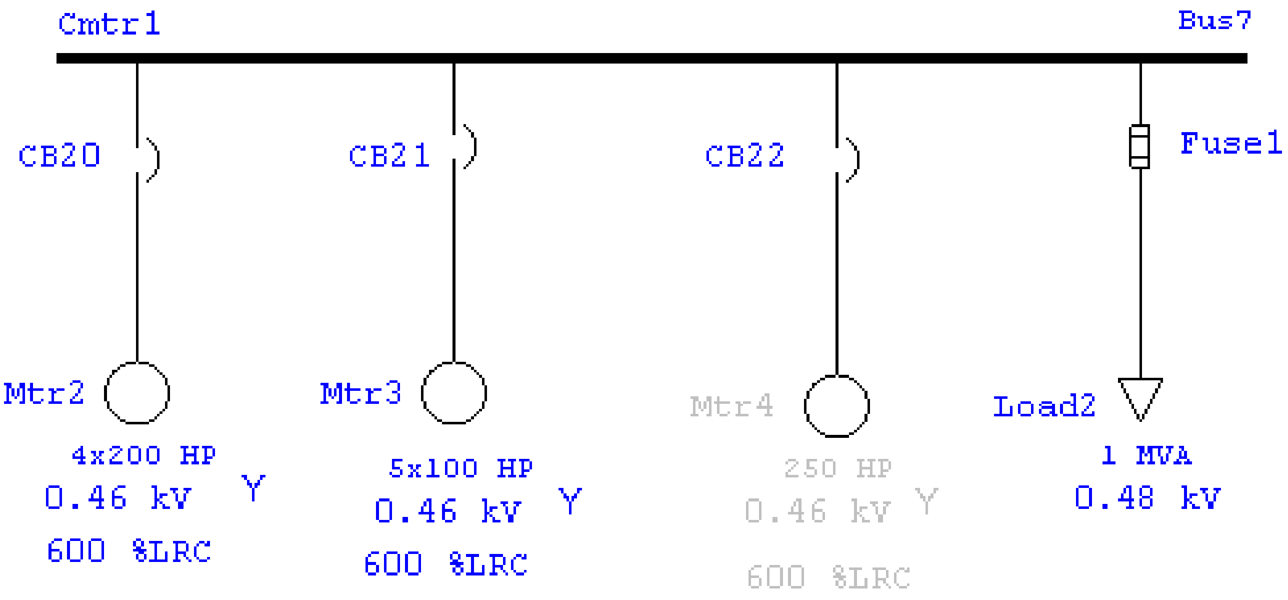
Cmtr1
Bus7
CB20
CB21
CB22
Fuse1
Mtr2
Mtr3
Mtr4
Load2
4x200 HP
0.46 kV
Y
600 %LRC
5x100 HP
0.46 kV
Y
600 %LRC
250 HP
0.46 kV
Y
600 %LRC
1 MVA
0.48 kV

Short-Circuit Alerts

- Bus Alert
- Protective Device Alert
- Marginal Device Limit

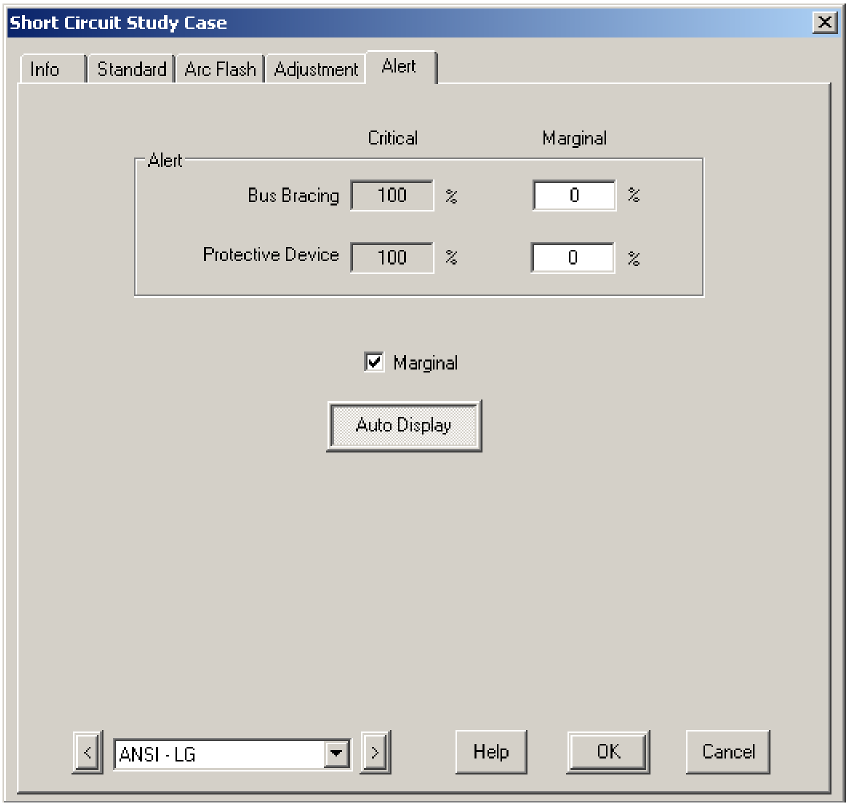
Info
Standard
Arc Flash
Adjustment
Alert
Auto Display
Help
OK
Cancel

Short Circuit Study Case

Alert

	Critical		Marginal	
Bus Bracing	100	%	0	%
Protective Device	100	%	0	%

☑ Marginal

ANSI - LG

Bus SC Rating

Type of Device	Monitored Parameter	Condition Reported
MV Bus (> 1000 Volts)	Momentary Asymmetrical. rms kA	Bracing Asymmetrical
	Momentary Asymmetrical. crest kA	Bracing Crest
LV Bus (<1000Volts)	Momentary Symmetrical. rms kA	Bracing Symmetrical
	Momentary Asymmetrical. rms kA	Bracing Asymmetrical

Protective Device Rating

Device Type	ANSI Monitored Parameters	IEC Monitored Parameters
LVCB	Interrupting Adjusted Symmetrical. rms kA	Breaking
HV CB	Momentary C&L	Making
	Momentary C&L Crest kA	N/A
	Interrupting Adjusted Symmetrical. rms kA	Breaking
Fuse	Interrupting Adjusted Symmetrical. rms kA	Breaking
SPDT	Momentary Asymmetrical. rms kA	Making
SPST Switches	Momentary Asymmetrical. rms kA	Making

3-Phase Duty SC Results

Run a 3-phase Duty SC calculation for a fault on Bus4. The display shows the Initial Symmetrical Short-Circuit Current.

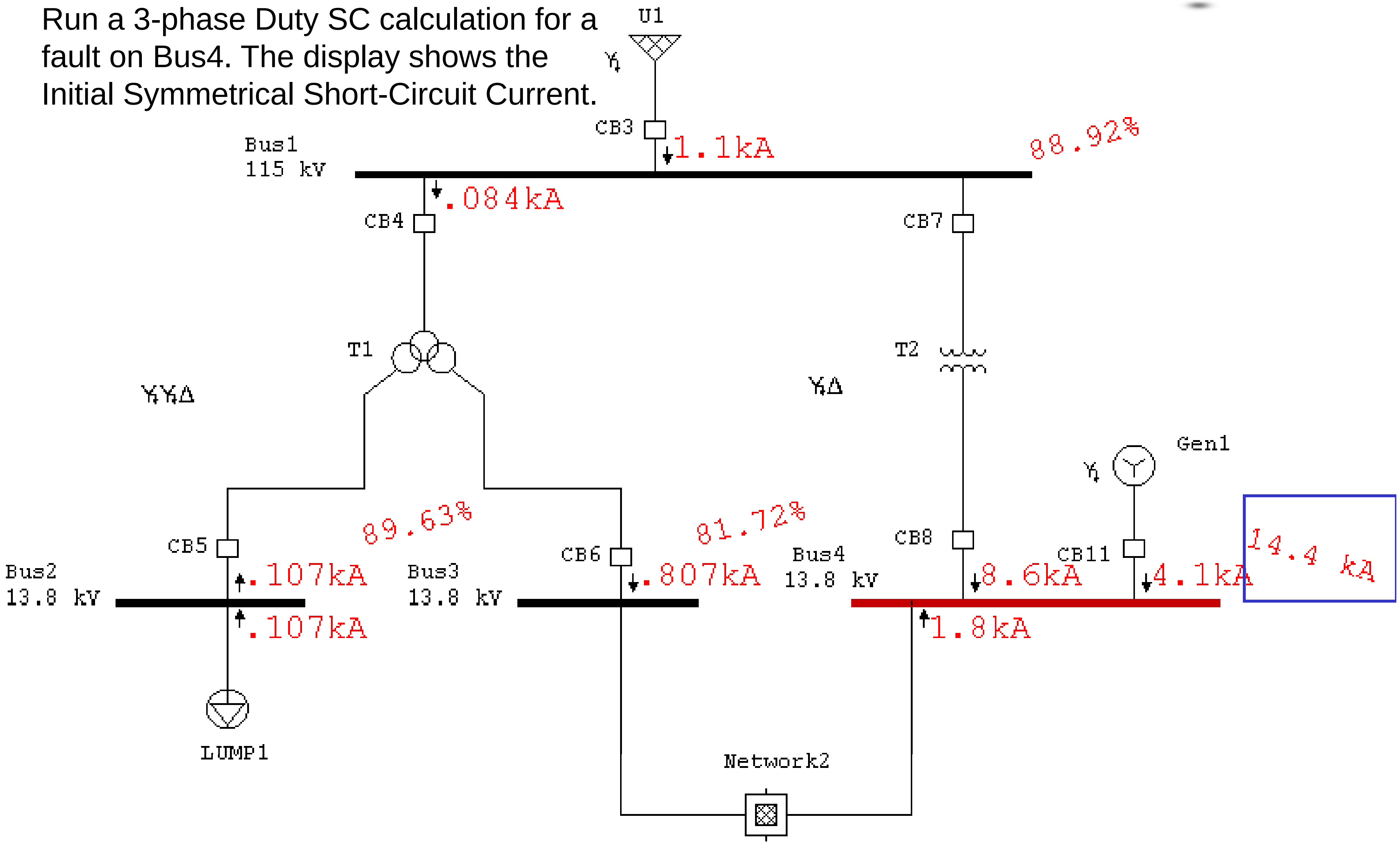

U1
CB3
1.1kA
Bus1
115 kV
88.92%
.084kA
CB4
CB7
T1
T2
YYΔ
YΔ
Gen1
89.63%
81.72%
CB5
CB6
Bus2
13.8 kV
.107kA
.107kA
Bus3
13.8 kV
.807kA
Bus4
13.8 kV
CB8
CB11
8.6kA
4.1kA
14.4 kA
1.8kA
LUMP1
Network2

Unbalance Fault Calculation

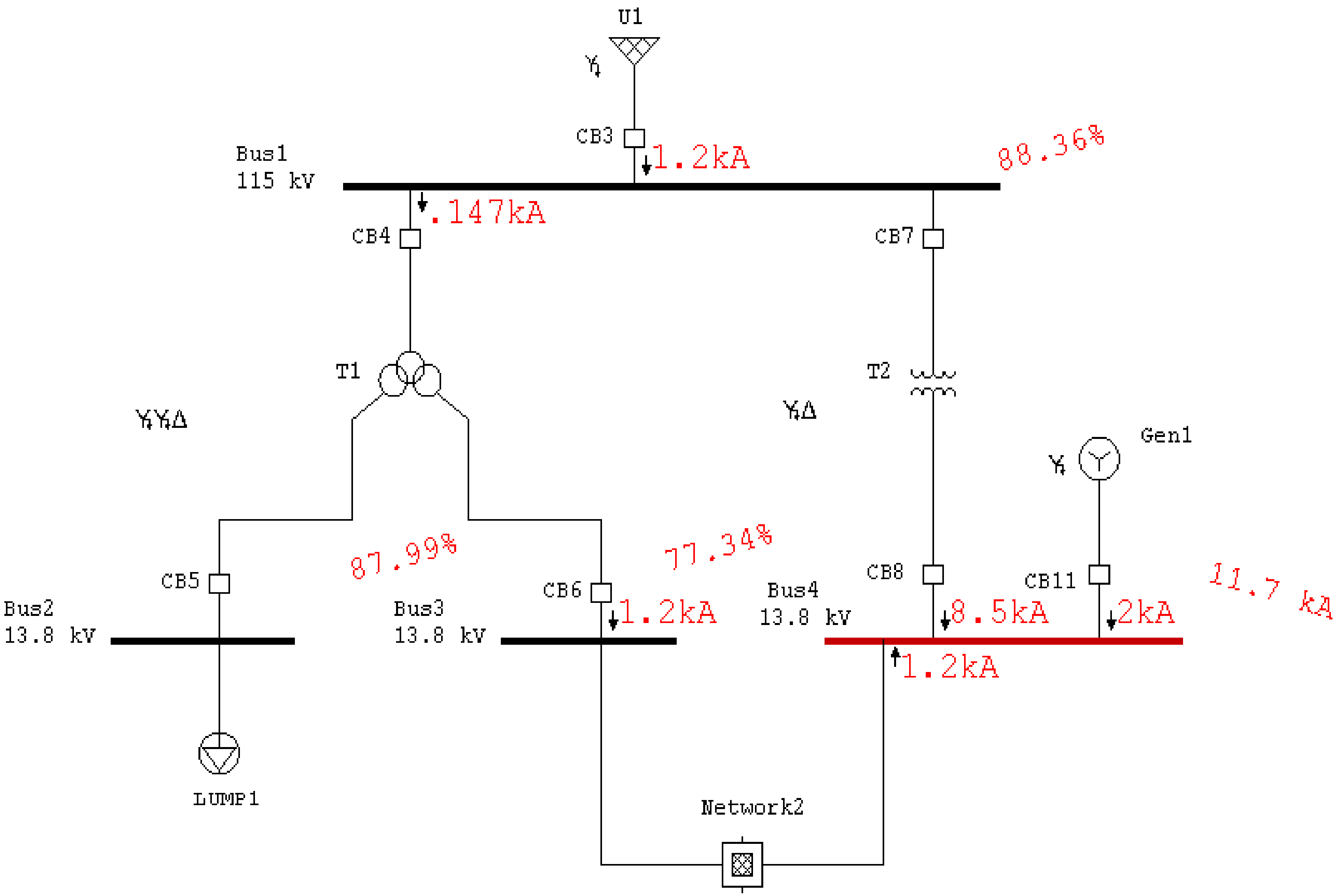
U1
CB3
1.2kA
88.36%
Bus1
115 kV
.147kA
CB4
CB7
T1
T2
YYΔ
YΔ
Gen1
87.99%
77.34%
CB5
CB6
CB8
CB11
11.7 kA
Bus2
13.8 kV
Bus3
13.8 kV
1.2kA
Bus4
13.8 kV
8.5kA
2kA
1.2kA
LUMP1
Network2